****

AM RADIO
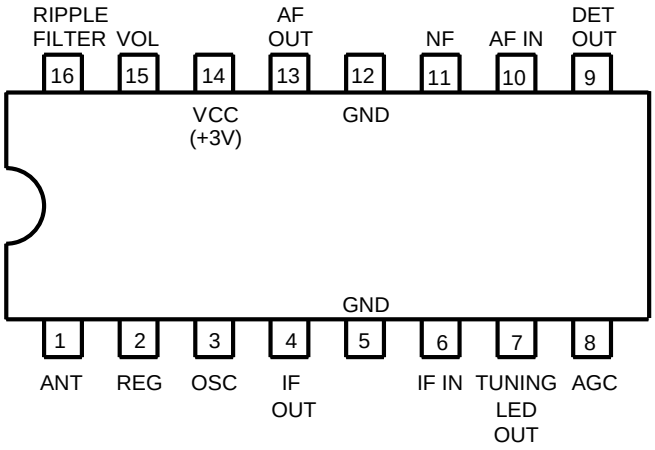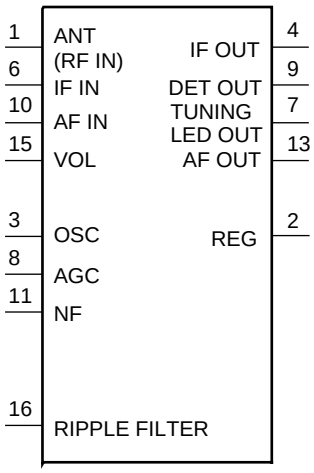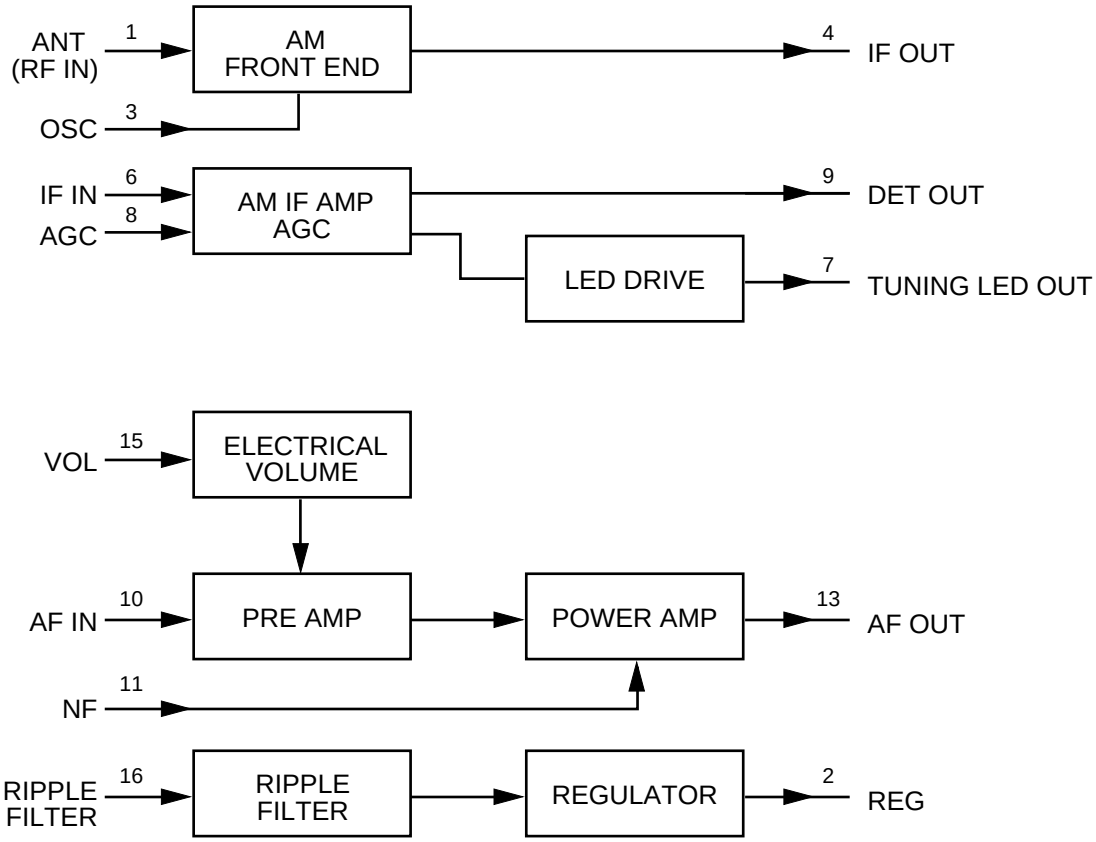
-TOP VIEW-