INTERFACE ADAPTER BOARD

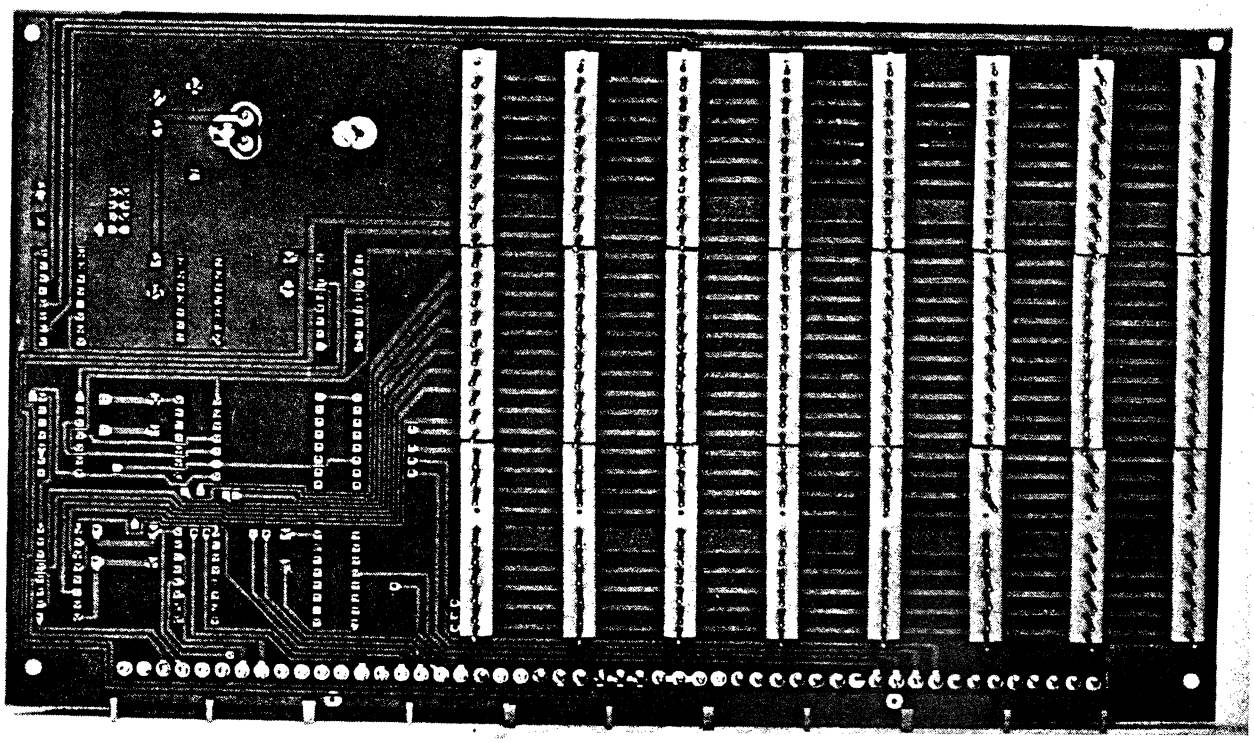

MODEL IA-1

Midwest Scientific Instruments, Inc.
Olathe, Kansas

INTERFACE ADAPTER BOARD MODEL IA-1

INTRODUCTION

The MSI Interface Adapter Board Model IA-1, is used to decode address information from the mother board and to select one of eight available I/O ports. Either serial or parallel interface cards may be used on any of the available I/O ports in order to communicate with peripheral devices such as CRT terminals, printers, disk memories, and others.

In the MSI-6800 Computer System PORT 0 resides at a base address of $F500. Each I/O port occupies eight available addresses, although an optional jumper must be installed on the interface adapter board in order to fully decode all eight addresses. Otherwise, without the jumper installed, only four addresses per slot are decoded. If the user desires to have only four addresses available per I/O port, then an additional jumper option is available on the card to allow only four addresses per port to be used. In addition, strappable options are provided which allow the base address of PORT 0 to be set at $8000 in order to be compatible with SWTP 6800 computer systems. The various jumper options are described more completely below.

ASSEMBLY INSTRUCTIONS

Before beginning assembly of the P.C. Board perform the following steps. Referring to the parts list carefully check the parts kit in order to properly identify each component and to make sure that all the necessary parts have been included.

Next, carefully examine the P.C. Board itself for any flaws or defects. A magnifying glass is helpful in identifying the presence of any hairline shorts between foils, incomplete etching of the board, or breaks in a foil. Such defects are rare but a careful preliminary examination is very worthwhile. Any defects should be corrected before beginning assembly of the board.

We recommend using a 30 watt soldering iron for all assembly. Use solder having a resin core, never use any type of acid based solders. A 60/40 or 63/37 alloy is recommended.

Be careful when soldering transistors and integrated circuits, as over heating of the leads can destroy the device. Also be careful to orient the device correctly before soldering.

IC sockets may be used if desired. However, use only high quality sockets such as the Texas Instruments Low Profile Version. Inexpensive sockets can often cause more problems than they solve.

The PC board has been silk screened to show the proper placement of all major components. Refer also to the assembly drawing for correct placement and orientation of all components.

ASSEMBLY PROCEDURE

( ) First install the ten pin Molex male connectors into the non-component side of the printed circuit board. These connectors will be used to receive interface cards which will be plugged into the backside (non-component side) of the interface adapter card. This means that the components will be mounted on the front side of the interface adapter board toward the front of the computer cabinet.

Be certain that the connectors are completely inserted into the board and that the plastic body of the connector is flat against the surface of the PC board before soldering. It is helpful to solder only the end connections of each connector first while holding the connector in the proper position. Make sure that the pins of each connector are exactly vertical before soldering the remaining connections. This will insure correct alignment of the interface boards as they are plugged into the interface adapter card.

( ) Using a pair of pliers, remove the index pins from each row of connectors.

( ) After the end pins of each connector have been soldered, the remaining pins may then be soldered at one time.

( ) Install the 7805 voltage regulator, IC 1, into the component side of the printed circuit board using a 4-40 screw, #4 lock washer, and hexnut provided. No heat sink is required.

( ) Identify IC 2, IC 3, IC 4, IC 5, IC 6, IC 7, IC 8, IC 9 and install these components into the printed circuit board in their proper locations referring to the Assembly Drawing No. 100024. If sockets are being used, then they may be installed and soldered into position at this time.

( ) Install the five female, 10 pin, Molex connectors on the bottom edge of the printed circuit boards. The main body of these connectors lies on the component side of the circuit board. First solder only the end pins of each connector while holding the connector in the proper position with the body flat against the printed circuit board and pushed tightly against the edge of the circuit board.

( ) After the end connections have been soldered, then solder the remaining pins of each connector.

( ) Locate C1, the 25 mfd, electrolytic capacitor, and install. Be careful to note the polarity marking on this capacitor before soldering.

( ) Locate capacitors C2 thru C10 and install in proper positions. Solder.

( ) Upon completion of P.C. Board assembly, carefully examine the board for the presence of any solder splashes, solder bridges, or shorts between adjacent pads on the board. These must be carefully removed before proceeding with the checkout of the board. A magnifying glass greatly aids in the detection of such defects. If available, excess flux may be removed from the board with trichlorethylene. This also makes the detection of defects much easier.

( ) Install the plastic keying pin in the index position of the bottom edge connector of the P.C. Board. This pin will prevent the P.C. Board from being accidentally plugged in backwards or with the pins offset.

( ) The Interface Adapter Board is now complete. Refer to the section covering strappable options and be sure that the P.C. Board is configured appropriately for your intended application. If the board is to be used in the MSI 6800 Computer System, no strap changes are necessary since the desired foil jumpers have been correctly placed during board manufacture.

THEORY OF OPERATION

Power is provided to the interface adapter board by a 7805 regulator mounted on the printed circuit board. IC 3, IC 4, IC 5, and IC 7, provide address decoding in order to select one of eight possible I/O slots. IC 2 provides buffering of the phase 2 clock, read/write signal, reset signal, and address lines A0, A1 and A2 which communicate with the interface bus. IC 8 and IC 9 are bi-directional data bus drivers which invert data passing between the data bus of the mother board and the interface data bus. Data signals are inverted on the mother board and are true on the interface bus. Jumpers JU1 thru JU8 are used to select the high order address for the board. Other jumpers are available to select between eight addresses and four addresses per I/O board as desired.

STRAPPABLE OPTIONS

Several strappable options are available on the interface adapter board which allow the user to strap the board at a desired base address as well as to select whether four addresses or eight addresses per I/O port will be used. The interface adapter board is furnished as standard with a base address of $F500, using eight addresses per I/O port for use in the MSI 6800 computer system. The foil jumpers have been left on the board to configure the board to the standard configuration and thus no jumpers need to installed at all unless a departure from the standard configuration is desired.

STRAPPABLE OPTIONS FOR IA-1 INTERFACE ADAPTER BOARD

PCB PAD or JUMPER NO.	IDENTIFICATION	
1	Address line A02	
2-3*	" " A03	
4-5*	" " A04	
6-7*	" " A05	
8-9*	Ground	
12-13*	Address line A10	
14-15*	" " A08	
10	Buffered Address line A02	
17	Interface Bus line UD4	
18	" " " UD3	
11	+5V	
16	+5V	
JU1	Select high order address	$FXXX
JU2	Select high order address	$EXXX
JU3	Select high order address	$DXXX
JU4	Select high order address	$CXXX
JU5	Select high order address	$BXXX
JU6	Select high order address	$AXXX
JU7	Select high order address	$9XXX
JU8	Select high order address	$8XXX

Note:

* Indicates the standard strapping configuration for the MSI 6800 Computer System.

I/O PORT ADDRESS ASSIGNMENTS

I/O PORT	I/O ADDRESSES	
	4 addresses/port	8 addresses/port (Standard)
0	$F500-$F503	$F500-$F507
1	$F504-$F507	$F508-$F50F
2	$F508-$F50B	$F510-$F517
3	$F50C-$F50F	$F518-$F51F
4	$F510-$F513	$F520-$F527
5	$F514-$F517	$F528-$F52F
6	$F518-$F518	$F530-$F537
7	$F51C-$F51F	$F538-$F53F

EIGHT ADDRESSES PER I/O PORT

In order to utilize eight addresses per I/O port, address line A02 must be brought to the interface bus. Since this address signal is not standard on the interface bus then one of the user defined lines, UD3 or UD4, must be employed for this purpose. Install a jumper between PAD 10 and PAD 18 in order to bring A02 to interface bus line UD3. Interface cards must now be designed so as to utilize A02 (UD3) in the address decoding scheme in order to utilize the eight address per port capability.

FOUR ADDRESSES PER I/O PORT

The interface adapter board is furnished standard with eight addresses per I/O port. If one desires to change this configuration, then the following jumpers must be removed: 2-3, 4-5, 6-7, 8-9.

The following jumpers must be installed in order to replace the jumpers which have just been cut: 1-2, 3-4, 5-6, 7-8.

CHANGE BASE ADDRESS OF BOARD FROM $FXXX TO $8XXX

A jumper in position JU1 is installed as standard on the interface adapter board. JU1 must be cut free and a jumper installed in position JU8 in order to change the high order address from $F to $8. Any high order address in between may also be obtained by selection of jumper positions JU1 thru JU8.

CHANGE BASE ADDRESS OF THE BOARD FROM $F500 TO $8000

Some users who may wish to use this interface adapter board as part of an SWTP 6800 system may desire to move base address to $8000. In order to accomplish this, JU1 must be moved and JU8 installed, as described above, in order to change the high order address from $F to $8. The next change which must be carried out is to eliminate the address lines A08 and A10 from the address decoding scheme. In

order to accomplish this, cut jumpers 14-15 and 12-13 and reinstall jumpers 12-16 and 14-11 in order to move the second digit of the address from $5 to $0. The base address of the interface adapter board will now be set to $8000. If four addresses per I/O slot are desired as well, then make the appropriate changes which are described above in order to configure the board for four addresses per port.

INTERFACE ADAPTER CHECKOUT PROCEDURE

The preferred procedure for checkout of circuit boards is to have a computer system available containing known good boards, except for the board under test. Of course this is not always possible.

( ) First, carefully examine the completed circuit board for the presence of any solder splashes or solder bridges between pads of I.C. sockets, or particularly, between a pad and a foil passing between pads. These locations having very close clearances are most vulnerable to such faults. Any defects of this type must be carefully removed before proceeding.

( ) Place the circuit board into the computer system Be certain that the index keying pin has been installed in order to prevent the circuit board from being accidentally plugged in backwards or with the pins offset.

( ) Apply power to the system. Using a voltmeter, or an oscilloscope if available, check the output of the 7805 voltage regulator in order to ascertain that a full 5 V.D.C., free of any ripple, is present.

( ) Plug a Serial Interface Board, Model SI-1, into Port 0 of the Interface Adapter Board.

( ) Refer to the RS-232-C or the Current Loop Connection Diagram and connect a terminal to the system as shown. Be sure that the baud rate selection strap has been properly positioned, either on the board or the DB-25 connector, for the terminal in use. With power applied to the system, pressing the reset button on the front panel should cause an asterisk (*) to be printed on the terminal as the prompt character. The MSI-BUG monitor should now accept input character commands through the interface.

( ) If the system does not respond properly, and the system is known to be good, except for the Interface Adapter, then double check the board again for shorts between adjacent foils and pads. If none can be found, then the Interface Adapter should be placed in a different mother board location, simultaneously with a functioning Interface Adapter Board, in order to run a test program. First, temporarily cut the address selection jumper JU-1 and install jumper JU-8 in order to move the base address of the Interface Adapter Board to $8500. A test program which

reads from or writes to various port addresses should now be run in a continuous loop. An oscilloscope must be used to ascertain whether the I/O select line for each I/O port is being selected. Address decoding faults or shorts between address or data lines must be located and corrected.

( ) Using an ohmmeter, check for shorts between any two pins of the 30 pin interface bus as well as the 50 pin mother board bus.

( ) Following a system reset operation, the I/O select line should be active, as the CPU reads the ACIA on Port 0, waiting for an input character command. If this line is active and the system still does not respond properly, then the defect is likely associated with either the DATA lines on the Interface Adapter Board or a problem with the Serial Interface Board. If the line is not active, then the Interface Adapter is not being addressed properly or a defect in the address decoding circuitry exists.

( ) If the above procedures do not solve the problem, then refer to the section covering general trouble shooting procedures.

MSI 6800 COMPUTER, IA-1, INTERFACE ADAPTER

PARTS LIST

ITEM NO.	QUANTITY	DESCRIPTION	REFERENCE DESIGNATION	MSI PART NO.
1	1	PCB, IA-1, Interface Adapter		977
3	9	CAP.,Disc,.01uf,25V	C2 thru C10	156
4	1	CAP.,Electro,25uf,25V	C1	177
6	1	IC, 7400	IC6	201
7	1	IC, 7402	IC5	203
8	1	IC, 7420	IC3	221
9	2	IC, 74S138	IC4, IC7	339
10	1	IC. 7805.+5V Regulator	IC1	495
11	2	IC. 8T26	IC8. IC9	428
12	1	IC, 8T97	IC2	420
13	1	KEYING PIN, Molex		1051
14	5	CONNECTOR, 10 Pin, F.G.		1043
15	24	CONNECTOR, 10 Pin, M.G.		1042
17	1	SCREW, 4-40 x 3/8, B.H.M.		716
18	1	NUT, 4-40, Hex		714
19	1	WASHER, #4, I.T.L.		744

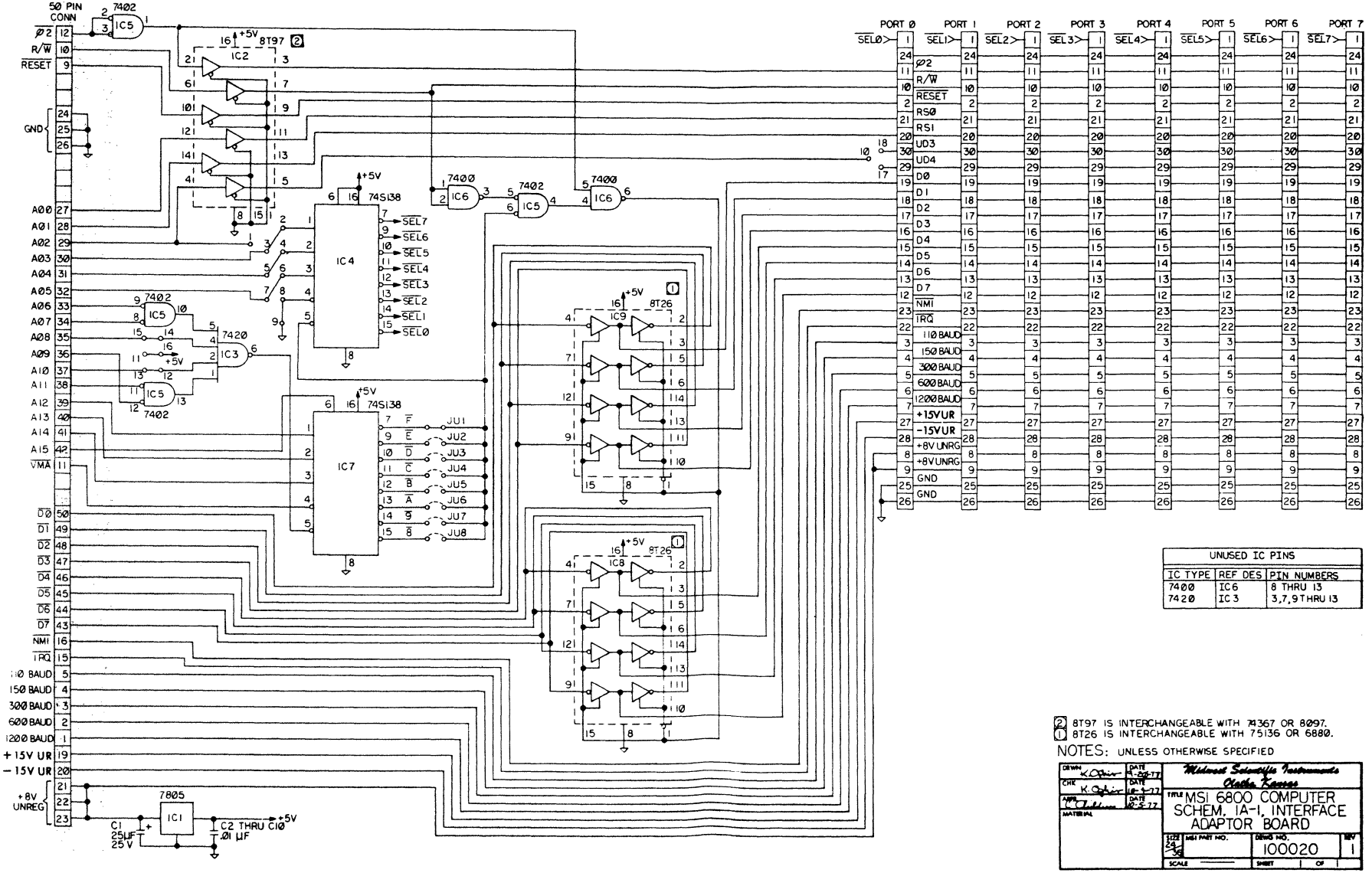

UNUSED IC PINS		
IC TYPE	REF DES	PIN NUMBERS
7400	IC6	8 THRU 13
7420	IC3	3,7,9 THRU 13

2 8T97 IS INTERCHANGEABLE WITH 74367 OR 8097.
1 8T26 IS INTERCHANGEABLE WITH 75136 OR 6880.

NOTES: UNLESS OTHERWISE SPECIFIED

DRWN K. Ophir	DATE 9-20-77	Midwest Scientific Instruments Olathe, Kansas
CHK K. Ophir	DATE 10-4-77	TITLE MSI 6800 COMPUTER SCHEM, IA-1, INTERFACE ADAPTOR BOARD
APPR [illegible]	DATE 10-5-77	
MATERIAL		SIZE 24/36 · MSI PART NO. · DWG NO. 100020 · REV 1
		SCALE — · SHEET · OF

REVISIONS						
REV	ZONE	DESCRIPTION	DR	CK	APR	DATE
1		UPDATED TO MATCH ETCH				APR 77

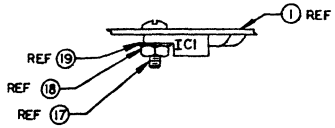

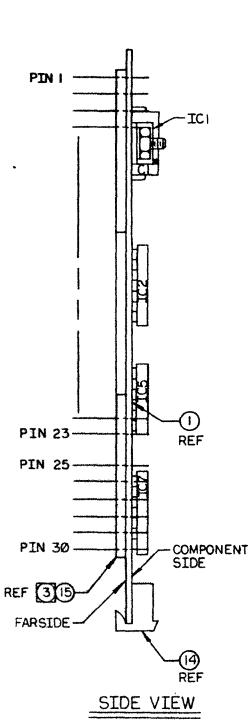

SIDE VIEW

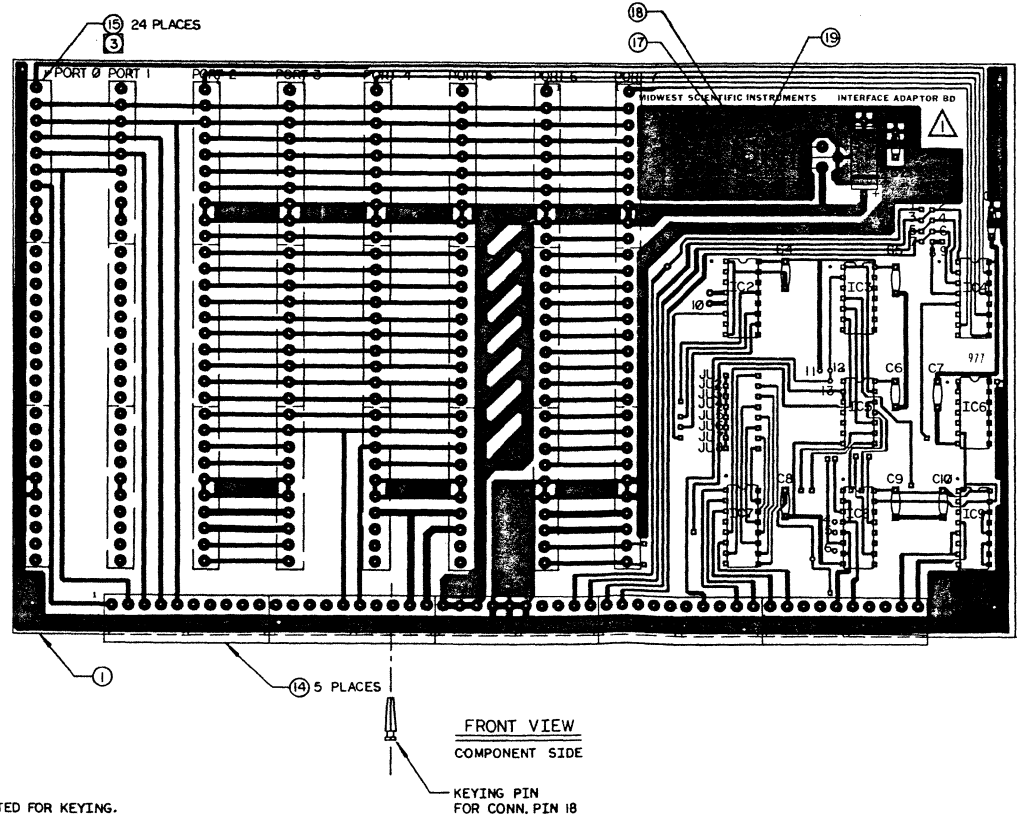

FRONT VIEW

COMPONENT SIDE

KEYING PIN FOR CONN. PIN 18

4. PIN 24 OF PORTS 0 THRU 7 IS OMITTED FOR KEYING.

3 MOUNT ITEM 15 ON FARSIDE AS SHOWN IN SIDE VIEW. SOLDER ITEM 15 ON COMPONENT SIDE (FRONT VIEW)

2 8T97 IS INTERCHANGEABLE WITH 74367 OR 8097.

1 8T26 IS INTERCHANGEABLE WITH 75136 OR 6880.

NOTES: UNLESS OTHERWISE SPECIFIED

ITEM	QTY	PART NUMBER	DESCRIPTION	REF DES	MSI P.N.
19	1		WASHER, #4, I.T.L.		744
18	1		NUT, 4-40, HEX		714
17	1		SCREW, 4-40 X3/8, BHM		716
3 15	24		CONNECTOR, 10 PIN, M, G		1042
14	5		CONNECTOR, 10 PIN, F, G		1043
12	1	2 8T97	IC	IC2	420
11	2	1 8T26	IC	IC8, IC9	428
10	1	7805	IC, +5V REGULATOR	IC1	495
9	2	74S138	IC	IC4, IC7	339
8	1	7420	IC	IC3	221
7	1	7402	IC	IC5	203
6	1	7400	IC	IC6	201
4	1		CAP, ELECTRO, 25 µF, 25V	C1	177
3	9		CAP, DISC, .01 µF, 25V	C2 THRU C10	156
1	1		PCB, IA-1, INTERFACE ADAPTOR		977

PARTS LIST

DRWN K Oehler	DATE 11-4-77	Midwest Scientific Instruments Olathe, Kansas	
CHK K Oehler	DATE 11-16-77	TITLE MSI 6800 COMPUTER ASSY, IA-1, INTERFACE ADAPTOR	
APPR Dax	DATE 11-28-77		
MATERIAL		SIZE A4 MSI PART NO. REF. 977	DRWG NO. 100024 REV 1
		SCALE 2/1	SHEET OF