WANG

VS-7010 COMPUTER SYSTEM

COMPANY PROPRIETARY STATEMENT

This document is the property of Wang Laboratories, Inc. All information contained herein is considered Company Proprietary, and its use is restricted solely to assisting you in servicing Wang products. Neither this document nor its contents may be disclosed, copied, revealed, or used in whole or in part for any other purpose without the prior written permission of Wang Laboratories, Inc. This document must be returned upon request of Wang Laboratories, Inc.

Technical Publications
Customer Service
Product Maintenance Manual

741-1818

COMPANY CONFIDENTIAL

PREFACE

This document is an Illustrated Maintenance manual (IM) for the Wang VS-7010 Computer System. The manual is organized in accordance with Custom Engineering Technical Documentation's approved PMM outline. The scope of this manual reflects the type of maintenance philosophy selected for this product.

The purpose of this manual is to provide the Wang-trained Customer Engineer (CE) with sufficient instructions to operate, troubleshoot, and repair the VS-7010 Computer System. The manual will be updated on a regular schedule or as necessary. Such updates will be published either as Publication Update Bulletins (PUBs) or as full revisions.

First Edition (April, 1988)

Use of the material in this document is authorized only for the purpose stated in the Preface, above.

© Copyright 1988 by Wang Laboratories, Inc.

Publication Update Bulletin

CUSTOMER SERVICE DOCUMENTATION

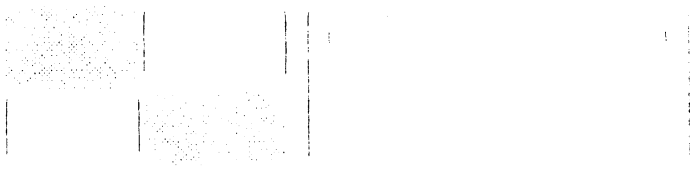

Date: 11/04/88 **Color:** Blue

Title: VS-7010 Computer System

This PUB Affects: 741-1818
742-1818

Previous Notices: None

Reason For Change: Corrections to Main Memory board 210-8703/-1 (MEM) jumper settings and to Serial IOC board (22V67) connector references.

COMPANY PROPRIETARY STATEMENT

This document is the property of Wang Laboratories, Inc. All information contained herein is considered Company Proprietary, and its use is restricted solely to assisting you in servicing Wang products. Neither this document nor its contents may be disclosed, copied, revealed, or used in whole or in part for any other purpose without the prior written permission of Wang Laboratories, Inc. This document must be returned upon request of Wang Laboratories, Inc.

Instructions: Remove and insert attached microfiche and/or pages as follows:

Remove Fiche:	**Insert Fiche:**
1, 3, and 5	1, 3, and 5

Remove Page:	**Insert Page:**
7-17/18	7-17/18
7-25/26	7-25/26
9-81/82	9-81/82
12-15/16	12-15/16

This sheet constitutes a permanent record of revisions: place it directly following the title page and in front of any previous PUB cover sheets.

WANG

© 1988, WANG LABORATORIES, INC., ONE INDUSTRIAL AVENUE, LOWELL, MA 01851 PRINTED IN U.S.A.

WARNING

DO NOT OPEN THE SWITCHING POWER SUPPLY UNDER ANY CIRCUMSTANCE. EXTREMELY DANGEROUS VOLTAGE AND CURRENT LEVELS, IN EXCESS OF 300 VOLTS DC AND UNLIMITED CURRENT, ARE PRESENT WITHIN THE POWER SUPPLY.

DO NOT ATTEMPT TO REPAIR THE POWER SUPPLY; IT IS FIELD REPLACEABLE ONLY.

AFTER POWERING THE UNIT DOWN AND DISCONNECTING THE AC POWER PLUG FROM THE WALL OUTLET, ALLOW ONE MINUTE BEFORE REMOVING THE POWER SUPPLY TO PROVIDE ADEQUATE TIME FOR ANY RESIDUAL VOLTAGE TO DRAIN THROUGH THE BLEEDER RESISTORS.

WARNING

THIS COMPUTER EQUIPMENT HAS BEEN VERIFIED AS FCC CLASS A.

IN ORDER TO MAINTAIN COMPLIANCE WITH FCC CLASS A VERIFICATION, THE FOLLOWING CONDITIONS MUST BE ADHERED TO DURING NORMAL OPERATION OF EQUIPMENT.

- ALL COVERS MUST BE ON THE SYSTEM AND SECURED IN THE PROPER MANNER.

- ALL INTERNAL CABLES MUST BE ROUTED IN THE ORIGINAL MANNER WITHIN THE CABLE CLAMPS PROVIDED FOR THAT PURPOSE.

- ALL EXTERNAL CABLES MUST BE SECURED AND THE PROPER CABLE USED TO ENSURE THAT CABLE SHIELDING IS PROPERLY GROUNDED TO THE CABLE CLAMPS PROVIDED.

- ALL HARDWARE MUST BE PROPERLY SECURED.

TABLE OF CONTENTS

SECTION 1

INTRODUCTION

Page

1.1 SCOPE AND PURPOSE 1-1

1.2 ORGANIZATION AND LAYOUT 1-2

1.3 RELATED DOCUMENTATION 1-3

1.4 ABBREVIATIONS AND SYMBOLS USED IN THIS MANUAL 1-4

SECTION 2

IDENTIFICATION

Page

2.1 MAJOR ASSEMBLIES 2-1

2.1.1 System Components 2-1

2.2 VS-7010 COMPUTER MAJOR PARTS (FRONT VIEW) 2-2

2.3 VS-7010 COMPUTER MAJOR PARTS (REAR VIEW) 2-3

2.4 VS-7010 CARD CAGE MAJOR PARTS 2-4

2.5 SUPPORT CONTROL UNIT (PC) MAJOR PARTS (FRONT VIEW). 2-5

2.6 SUPPORT CONTROL UNIT (PC) MAJOR PARTS (REAR VIEW) . 2-6

TABLE OF CONTENTS

SECTION 3

CONTROLS AND INDICATORS

Page

3.1 OPERATOR CONTROLS 3-1
3.1.1 VS-7010 Front Panel Controls 3-1
3.1.2 VS-7010 Rear Panel Controls 3-2
3.1.3 Optional 6550 Gate Array Assembly Controls 3-3
3.1.4 SCU (Professional Computer) Rear Panel Controls 3-4
3.1.5 SCU (PM 004L) Monitor Controls 3-5

3.2 OPERATOR INDICATORS 3-6
3.2.1 VS-7010 Front Panel Indicators 3-6
3.2.2 Optional 6550 Gate Array Assembly (3270 Operation) Indicators 3-7
3.2.3 Optional 6550 Gate Array Assembly (WSN Operation) Indicators 3-8
3.2.4 Optional 6550 Gate Array Assembly (Teletex Operation) Indicators 3-9
3.2.5 Optional Multiline TC Panel (RS232) Indicators 3-10
3.2.6 Optional Multiline TC Panel (RS366) Indicators 3-11
3.2.7 Optional Multiline TC Panel (X.21) Indicators 3-12
3.2.8 Optional Multiline TC Panel (RS449) Indicators 3-13
3.2.9 SCU (Professional Computer) Front Panel Indicators 3-14

3.3 SERVICE CONTROLS 3-15
3.3.1 Multioutput Switching Power Supply Controls 3-15
3.3.2 Power Supply Controller Board Controls 3-16
3.3.3 Serial IOC (23V67) Controls 3-18
3.3.4 SMD IOC (23V98-4) Controls 3-19
3.3.5 Optional High-Speed SMD IOC (70V98-4A) Controls 3-20
3.3.6 Kennedy Tape IOC (23V95-1) Controls 3-21

TABLE OF CONTENTS

SECTION 3

CONTROLS AND INDICATORS (CONT.)

Page

3.3.7 Telex Tape IOC (23V95-2) Controls 3-22
3.3.8 Multiline TC IOC (23V86/96) Controls 3-23
3.3.9 Optional 6550 Gate Array Assembly Controls 3-24

3.4 SERVICE INDICATORS 3-25
3.4.1 Power Controller Board Indicators 3-25

SECTION 4

OPERATION

Page

4.1 POWER-UP AND B.I.T. DIAGNOSTIC PROCEDURE 4-1

4.2 POWER-DOWN PROCEDURE 4-15

TABLE OF CONTENTS

SECTION 5

PREVENTIVE MAINTENANCE

Page

5.1 MATERIALS REQUIRED 5-1

5.2 PM SCHEDULE 5-2

5.3 OPERATIONAL CHECK 5-3

5.4 CLEANING 5-4

5.5 INSPECTION 5-5

5.6 ADJUSTMENTS 5-6

SECTION 6

TROUBLESHOOTING

Page

6.1 TOOLS AND EQUIPMENT 6-1
6.1.1 Standard Tools And Equipment 6-1
6.1.2 Special Tools And Equipment 6-2

TABLE OF CONTENTS

SECTION 6

TROUBLESHOOTING (CONT.)

Page

6.2 OFF-LINE DIAGNOSTICS 6-3
6.2.1 Power-Up Diagnostics 6-4
6.2.2 Accessing DCS Diagnostics 6-5
6.2.3 Running DCS Diagnostics 6-11
6.2.4 DCS HELP Menu 6-12
6.2.5 DCS Test Screens 6-13
6.2.6 Off-Line Diagnostics Error Management 6-16
6.2.7 Intermittent Error Looping 6-17
6.2.8 DCS Log 6-18

6.3 I/O BIT MONITOR DIAGNOSTICS 6-19
6.3.1 Serial IOC (23V67) I/O BIT Monitor Diagnostic Switch Setting 6-20
6.3.2 SMD IOC (23V98-4) I/O BIT Monitor Diagnostic Switch Setting 6-21
6.3.3 High-Speed Disk IOC (70V98-4A) I/O BIT Monitor Diagnostic Switch Setting 6-22
6.3.4 Kennedy Tape IOC (23V95-1) I/O BIT Monitor Diagnostic Switch Setting 6-23
6.3.5 Telex Tape IOC (23V95-2) I/O BIT Monitor Diagnostic Switch Setting 6-24
6.3.6 Multiline TC IOC (23V86/96) I/O BIT Monitor Diagnostic Switch Settings 6-25
6.3.7 Gate Array Assembly Diagnostics 6-29

6.4 ON-LINE DIAGNOSTICS 6-31

TABLE OF CONTENTS

SECTION 6

TROUBLESHOOTING (CONT.)

Page

6.5 MEMORY DUMP PROCEDURES 6-32
6.5.1 Control Mode Dump 6-33
6.5.2 Continuable And Snapshot Dumps 6-46
6.5.3 Errors Requiring a Memory Dump 6-51

6.6 SCU ERROR LOG 6-69

6.7 SERVICE LOG 6-73

6.8 POWER SUPPLY TROUBLESHOOTING 6-75

6.9 SCU (PROFESSIONAL COMPUTER) DIAGNOSTICS/ TROUBLESHOOTING 6-77

6.10 SCU (PM-004L) MONITOR TROUBLESHOOTING 6-78

6.11 TROUBLESHOOTING PROCEDURES 6-79

TABLE OF CONTENTS

SECTION 7

REPAIR

Page

7.1 TOOLS AND TEST EQUIPMENT 7-1

7.2 MAINFRAME REMOVAL PROCEDURES 7-2
7.2.1 Top Cover Removal 7-2
7.2.2 Front Cover Removal 7-3
7.2.3 Side Cover Removal 7-4
7.2.4 Card Cage Cover Removal 7-5
7.2.5 General PCB Removal 7-6
7.2.6 Central Processing Unit (CPU) Removal 7-8
7.2.7 Address Generation Unit (AGU) Removal 7-10
7.2.8 Address Translation Unit (ATU) Removal 7-12
7.2.9 Support Control Unit (SCU) Removal 7-14
7.2.10 Memory Control Unit (MCU) Removal 7-15
7.2.11 Main Memory (MEM) Board (210-8703/-1) Removal .. 7-17
7.2.12 Main Memory (MEM) Board (210-9874/-1) Removal .. 7-19
7.2.13 System Bus Interface (SBI) Removal 7-21
7.2.14 SMD IOC (23V98-4) Removal 7-23
7.2.15 Serial IOC (23V67) Removal 7-26
7.2.16 Kennedy Tape (23V95-1) IOC Removal 7-28
7.2.17 Telex Tape (23V95-2) IOC Removal 7-30
7.2.18 Multiline TC (23V86/96) Removal 7-32
7.2.19 Power Supply Controller Board Removal 7-34
7.2.20 DC Power Distribution Unit (DC PDU) Removal 7-37
7.2.21 Front Fan Housing Removal 7-40
7.2.22 Rear Fan Housing Removal 7-43
7.2.23 AC Power Distribution Unit (AC PDU) Removal 7-46
7.2.24 Multioutput Power Supply Removal 7-48
7.2.25 Control Panel Removal 7-53

TABLE OF CONTENTS

SECTION 7

REPAIR (CONT)

Page

7.2.26 Lighted Pushbutton Switch Lamp Removal 7-55
7.2.27 Card Cage Removal 7-56
7.2.28 General Rear Door I/O Panael Removal 7-61
7.2.29 6550 Gate Array Assembly Removal 7-63
7.2.30 Multiline TC Panel Removal 7-66
7.2.31 EAPA Panel Removal 7-69
7.2.32 SCU Interface Cable Removal 7-71
7.2.33 DC PDU Power Harness Removal 7-73
7.2.34 Multioutput Power Supply On/Off Cable Removal 7-75
7.2.35 Multioutput Power Supply AC PDU Cable Removal 7-77
7.2.36 Foam Air Filter Removal 7-78
7.2.37 Optional High-Speed SMD IOC (70V98-4A) Removal 7-79

7.3 SCU (PROFESSIONAL COMPUTER) REMOVAL PROCEDURES . 7-82

7.4 SCU (PM-004L) MONITOR REMOVAL PROCEDURES 7-83

TABLE OF CONTENTS

SECTION 8

ADJUSTMENTS

Page

8.1 TOOLS AND EQUIPMENT 8-1

8.2 ELECTRICAL ADJUSTMENTS 8-2
8.2.1 Multioutput Power Supply Voltage Adjustments 8-2
8.2.2 Power Supply Controller Adjustments 8-6

SECTION 9

UNPACKING AND SETUP

Page

9.1 INSTALLATION SITE CHECK 9-1

9.2 TOOLS AND EQUIPMENT 9-2

9.3 UNPACKING PROCEDURES 9-3
9.3.1 Unpacking and Inspecting VS-7010 Computer System 9-3
9.3.2 Unpacking and Inspecting SCU (Professional Computer) 9-5
9.3.3 Unpacking and Inspecing SCU (PM-004L) Monitor 9-6
9.3.4 Unpacking and Inspecting SCU (720) Keyboard 9-7
9.3.5 Unpacking and Inspecting Peripherals 9-8
9.3.6 Claims Information 9-9
9.3.7 Initial Set-Up 9-10

TABLE OF CONTENTS

SECTION 9

UNPACKING AND SETUP (CONT.)

Page

9.4 INSPECTION 9-11
9.4.1 VS-7010 Mainframe Inspection 9-11
9.4.2 Peripheral Inspection 9-13
9.4.3 VS-7010 Power Service Requirements (Domestic) 9-14

9.5 SCU (PROFESSIONAL COMPUTER) JUMPERS 9-16

9.6 CONNECTIONS 9-17
9.6.1 SCU Monitor Connections 9-17
9.6.2 SCU (720) Keyboard Connections 9-18
9.6.3 SCU (Professional Computer) Connections 9-19
9.6.4 VS-7010 Mainframe Connections 9-20
9.6.5 Mainframe Initial DC Voltage Check 9-21

9.7 SOFTWARE INSTALLATION 9-22
9.7.1 SCU Software Installation 9-22
9.7.2 Initial Program Load (IPL) 9-35
9.7.3 System Generation (GENEDIT) Procedures 9-54
9.7.4 IPL Initialization Errors 9-59
9.7.5 Version Checking During IPL 9-60

9.8 REMOTE SYSTEM ADMINISTRATOR FACILITY 9-62

9.9 OPTION BOARD UPGRADE INSTALLATION 9-63
9.9.1 Kennedy Tape Drive (23V95-1A) 9-64
9.9.2 Telex Tape Drive (23V95-2A) 9-66
9.9.3 Second SMD (23V98-4A) 9-68
9.9.4 Asynchronous TC (23V86-16A) 9-70
9.9.5 Multiline TC (23V96-8A) 9-73

TABLE OF CONTENTS

SECTION 9

UNPACKING AND SETUP (CONT.)

Page

9.9.6 Multiline TC (23V96-16A) 9-76

9.10 OPTION PANEL INSTALLATION 9-79
9.10.1 Additional EAPA Installation 9-79
9.10.2 6550 Gate Array TC (GATC) Panel Installation 9-82
9.10.3 Fiber Optic Panel (FOAPA) Installation 9-84
9.10.4 WangNet P-Band Modem Installation 9-85
9.10.5 802.3 VS Interface Panel Installation 9-86
9.10.6 Wang Asynchronous Communications Sub-System (WACS) Installation 9-87

9.11 VS-7010 MAIN MEMORY UPGRADES 9-88

SECTION 10

FUNCTIONAL DESCRIPTION

Page

10.1 INTRODUCTION 10-1

10.2 VS-7010 COMPUTER SYSTEM ARCHITECTURE 10-2

TABLE OF CONTENTS

SECTION 11

SPECIFICATIONS

Page

11.1 HARDWARE 11-1
11.1.1 VS-7010 Mainframe 11-1
11.1.2 VS-7010 Architecture 11-2
11.1.3 Multioutput Power Supply Specifications 11-3

11.2 OPERATING SYSTEM SOFTWARE 11-4

11.3 DIAGNOSTICS 11-5
11.3.1 VS-7010 Built-In Test (BIT) Programs 11-5
11.3.2 Diagnostic Tests 11-6

SECTION 12

ILLUSTRATED PARTS

Page

12.1 MAJOR ASSEMBLIES 12-1

12.2 VS-7010 SUBASSEMBLIES 12-2
12.2.1 VS-7010 Computer System Covers 12-2
12.2.2 VS-7010 Computer Chassis 12-4
12.2.3 VS-7010 Computer Card Cage 12-6
12.2.4 VS-7010 Rear Panel Assembly 12-8

TABLE OF CONTENTS

SECTION 12

ILLUSTRATED PARTS (CONT.)

Page

12.3 SUPPORT CONTROL UNIT SUBASSEMBLIES 12-10
12.3.1 SCU Professional Computer 12-10
12.3.2 SCU PM004L Monitor (279-0659) 12-12

12.4 VS-7010 POWER INTERCONNECT 12-14

12.5 CABLE ASSEMBLIES 12-16
12.5.1 Standard Cable Assemblies 12-16
12.5.2 Optional Cable Assemblies 12-18

SECTION 1
INTRODUCTION

SECTION 1 CONTENTS

SECTION 1

INTRODUCTION

Page

1.1 SCOPE AND PURPOSE 1-1

1.2 ORGANIZATION AND LAYOUT 1-2

1.3 RELATED DOCUMENTATION 1-3

1.4 ABBREVIATIONS AND SYMBOLS USED IN THIS MANUAL 1-4

INTRODUCTION

1.1 Scope and Purpose

This manual contains installation, operation, troubleshooting, and repair information for the VS-7010 Computer System, a full function VS system with multi-user DP and WP capabilities. This manual also contains a functional description of the VS-7010 and an illustrated breakdown of replaceable parts.

The purpose of the manual is to provide Customer Engineering personnel with the information necessary to install, troubleshoot, and repair any model of the VS-7010 in the field. Familiarity with large VS systems (150, 300, 7110, 7120 and 7150) is recommended for effective use of this manual.

● END

1.2 Organization and Layout

This manual is divided into 12 sections numbered 1 through 12. Each section describes a separate maintenance subject and is arranged to minimize references to other sections. Referencing to other frames is made by means of an arrow (➡) followed by the section number(s) being referenced.

All or most information pertaining to a specific task is located on a single and/or double frame. Each frame contains illustrations, numbered steps, and/or text describing the individual steps required to accomplish each task. The steps within a frame are numbered in sequence in a clockwise direction around the various illustrations. Each section is preceded by the section number and a section table of contents. The sections and corresponding frames are arranged in numerical sequence from left-to-right and from top-to-bottom on the individual fiche cards.

● END

1.3 Related Documentation

Document	*Part Number*
Professional Computer	742-1190
PM-004L Monochrome Monitor	742-1647
VS Large Cable Concentrator	742-1706
802.3 VS Interfaces	742-1794
Wang Asynchronous Communications Subsystem (WACS)	742-1766
VS-Test On-Line Test Package Handbook	741-1767
VS-300 Diagnostic Handbook	741-1742

● END

1.4 Abbreviations And Symbols Used In This Manual (Sheet 1 of 4)

Abbreviation/Symbol	*Definition*
A/D	Analog-to-Digital
AC	Alternating Current
AGU	Address Generation Unit
ATU	Address Translation Unit
ANSI	American National Standards Institute
APA	Active Port Assembly
ASSY	Assembly
BIT	Built In Test
BPI	Bits Per Inch
CBL	Cable
CC	Cable Concentrator
CM	Control Mode
CMD	Cartridge Module Drive
CP	Central Processor
CPU	Central Processing Unit
DC	Direct Current
DCS	Diagnostic Control System
DIP	Dual In-line Package
DISKEX	Disk Exerciser
DOS	Disk Operating System
DRAM	Data Random Access Memory

➡NEXT

1.4 Abbreviations And Symbols Used In This Manual (Sheet 2 of 4)

Abbreviation/Symbol	*Definition*
DVM	Digital Voltmeter
EAPA	Electrically Active Port Assembly
ECC	Error Correction Code
EIA	Electronic Industries Association
EOT	End Of Tape
FCC	Federal Communications Commission
FMD	Fixed Module Drive
FRU	Field-Replaceable Unit
GATC	Gate Array Telecommunications
HEX	Hexidecimal Notation (H)
I/O	Input/Output
IOC	Input/Output Controller
IOP	Input/Output Processor
IOSW	Input/Output Status Word
IPB	Illustrated Parts Breakdown
IPC	Interprocessor Communications
IPL	Initial Program Load
KG	Kilogram
LED	Light-Emitting Diode
M	Mega, (Million)
MBPS	Megabits Per Second

➡NEXT

1.4 Abbreviations And Symbols Used In This Manual (Sheet 3 of 4)

Abbreviation/Symbol	*Definition*
MCU	Memory Control Unit
MLTC	Multiline Telecommunications
MM	Main Memory
MODEM	Modulator/Demodulator
NEMA	National Electrical Manufacturers Association
NRZI	Nonreturn to Zero
OS	Operating System
P-BAND	Peripheral Band
P/N	Part Number
PC (SCU)	Professional Computer (Support Control Unit)
PCA	Printed Circuit Assembly
PDA	Physical Device Address
PDU	Power Distribution Unit
PE	Phase Encode
PF	Program Function
PM	Preventive Maintenance
PREX	Printer Exerciser
RAM	Random Access Memory
RF	Radio Frequency
RSAF	Remote System Administrative Facility
RSD	Removable Storage Drive

➡NEXT

1.4 Abbreviations And Symbols Used In This Manual (Sheet 4 of 4)

Abbreviation/Symbol	*Definition*
SBI	System Bus Interface
SCU (PC)	Support Control Unit (Professional Computer)
SCUI	Support Control Unit Interface
SMD	Storage Module Drive
SPB	Support Packet Bus
SPS	Switching Power Supply
SQB	Status Qualifier Byte
SVC	Supervisor Call
SW	Switch
SYSGEN	System Generation
TAC	Technical Assistance Center
TC	Telecommunications
TP	Test Point
TPEX	Tape Exerciser
V	Volts
VS	Virtual Storage
VTOC	Volume Table Of Contents
WS	Workstation
WLI P/N	Wang Laboratories, Inc. Part Number
WSEX	Workstation Exerciser

● END

SECTION 2

IDENTIFICATION

SECTION 2 CONTENTS

SECTION 2

IDENTIFICATION

Page

2.1 MAJOR ASSEMBLIES 2-1
2.1.1 System Components 2-1

2.2 VS-7010 COMPUTER MAJOR PARTS (FRONT VIEW) 2-2

2.3 VS-7010 COMPUTER MAJOR PARTS (REAR VIEW) 2-3

2.4 VS-7010 CARD CAGE MAJOR PARTS 2-4

2.5 SUPPORT CONTROL UNIT (PC) MAJOR PARTS (FRONT VIEW). 2-5

2.6 SUPPORT CONTROL UNIT (PC) MAJOR PARTS (REAR VIEW) . 2-6

Major Assemblies

System Components

VS-7010 Computer

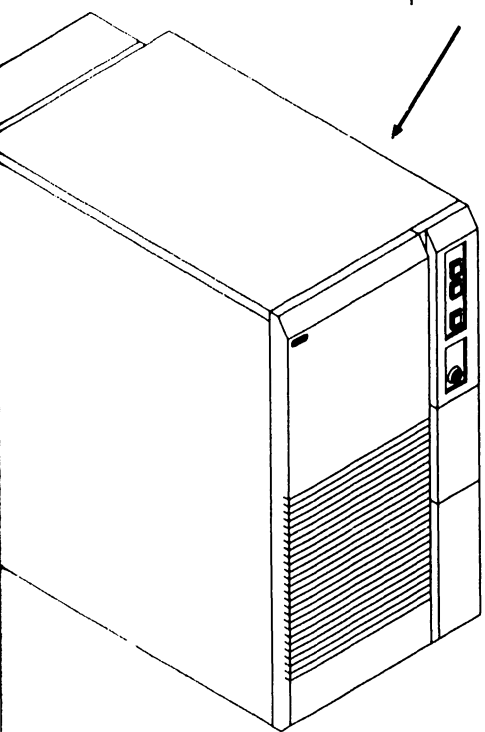

SCU (PM-004L) Monitor

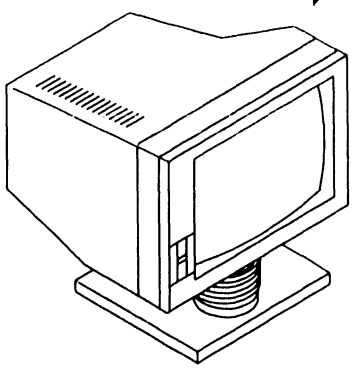

SCU (720) Keyboard

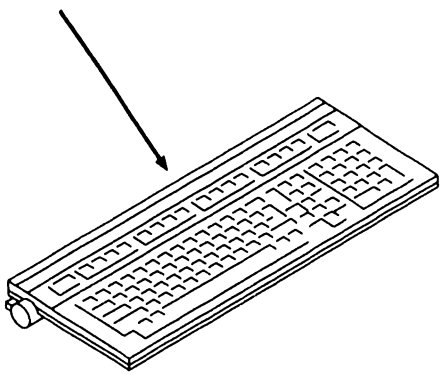

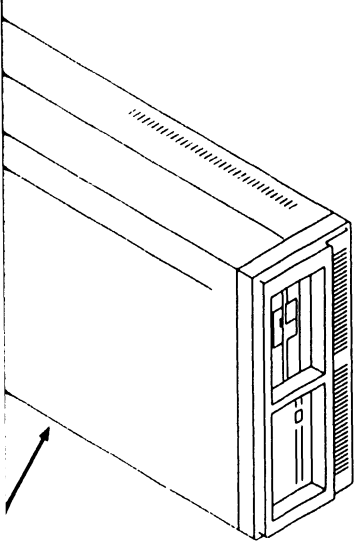

rt Control Unit
ssional Computer)

● END

COMPANY CONFIDENTIAL

2.2 VS-7010 Computer Major Parts (Front View)

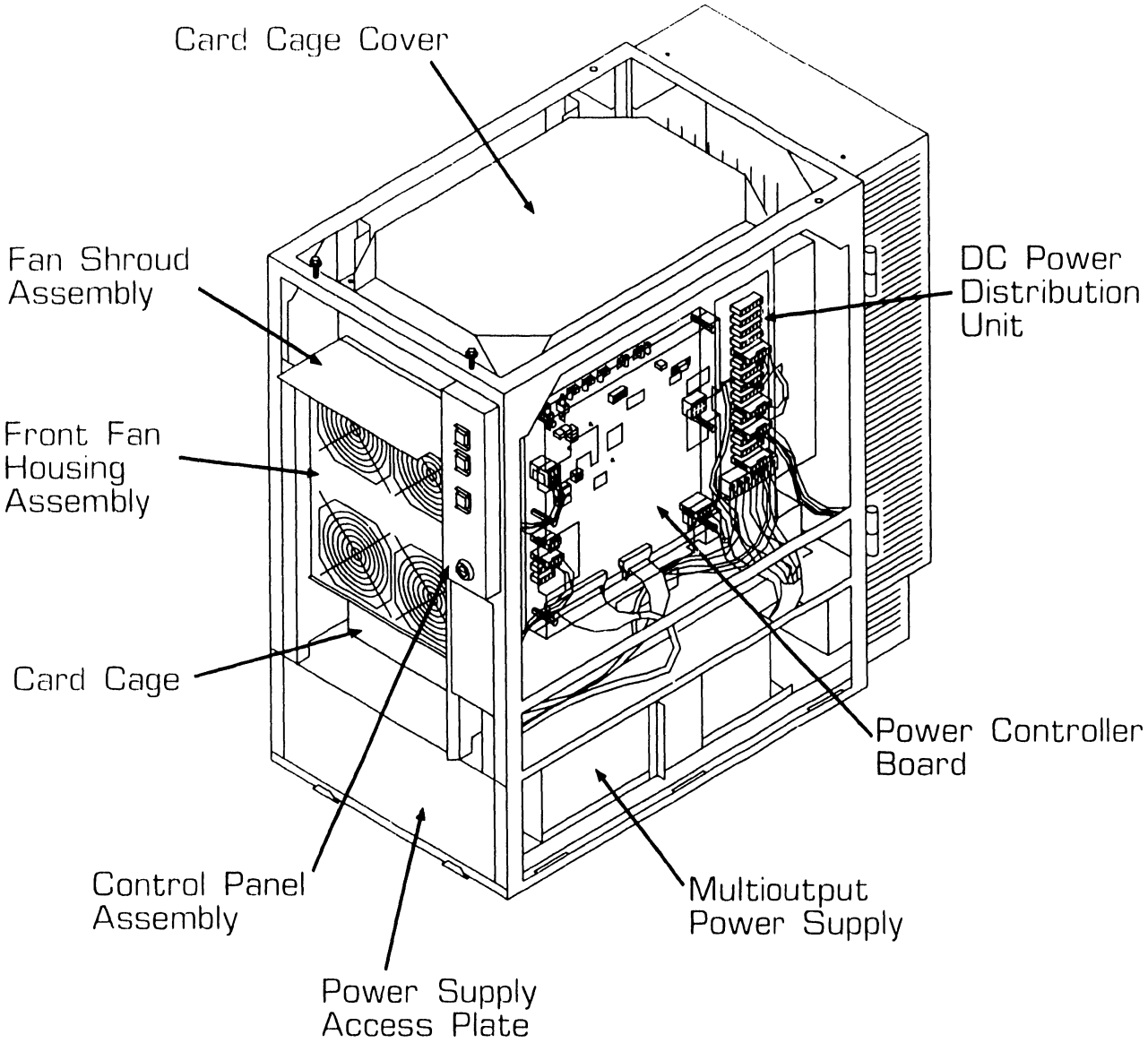

● END

2.3 VS-7010 Computer Major Parts (Rear View)

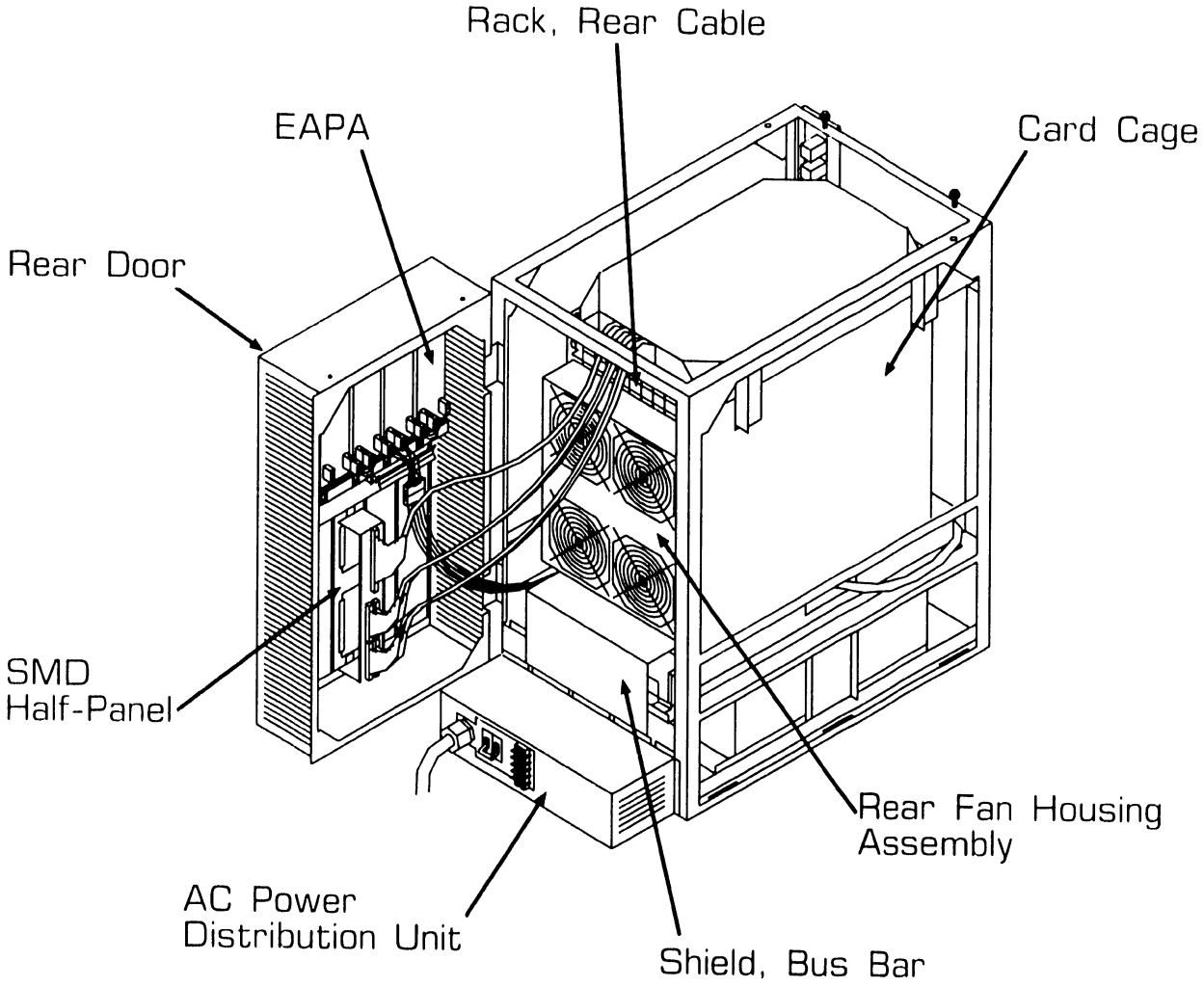

● END

2.4 VS-7010 Card Cage Major Parts

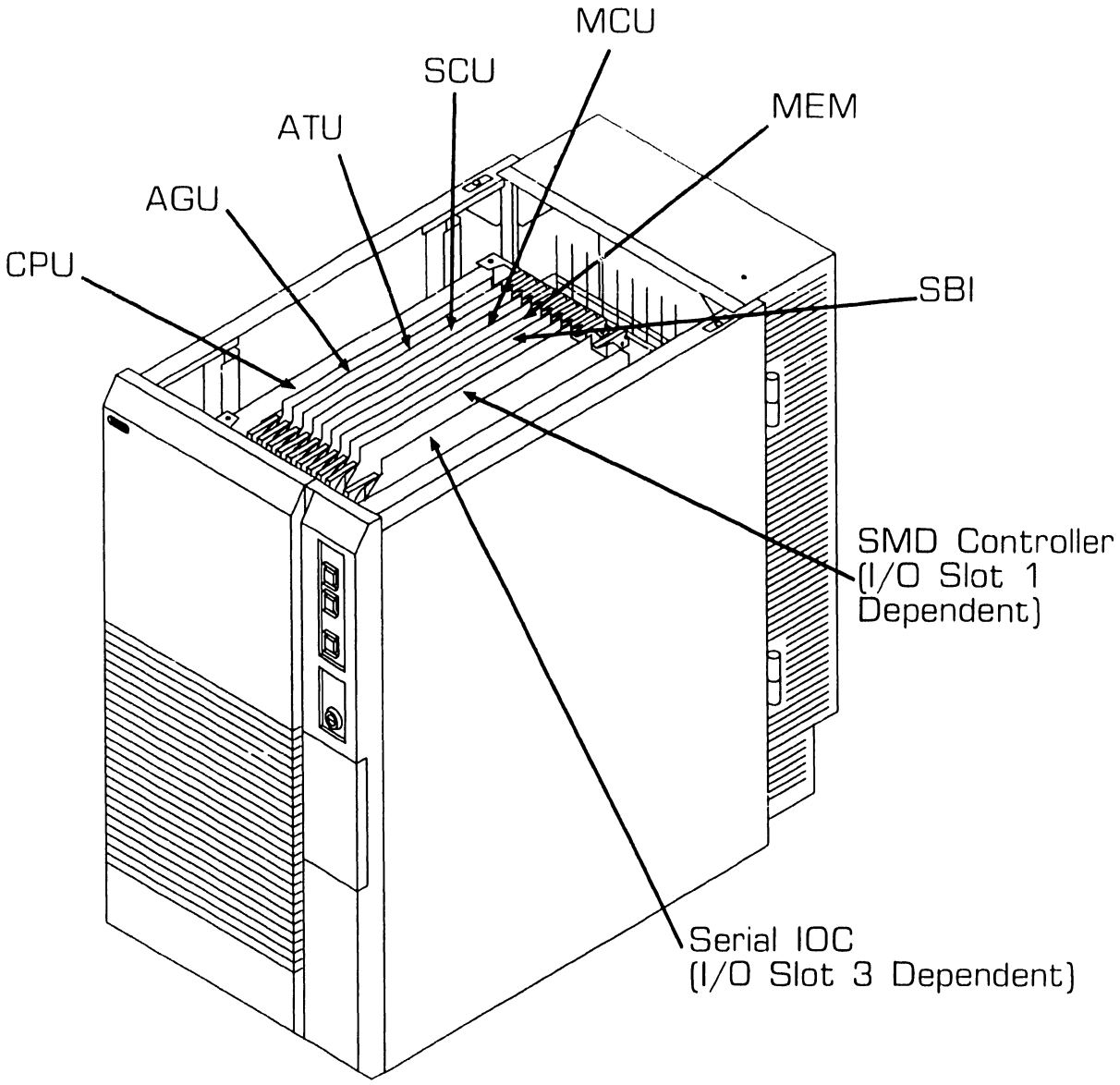

● END

2.5 Support Control Unit (PC) Major Parts (Front View)

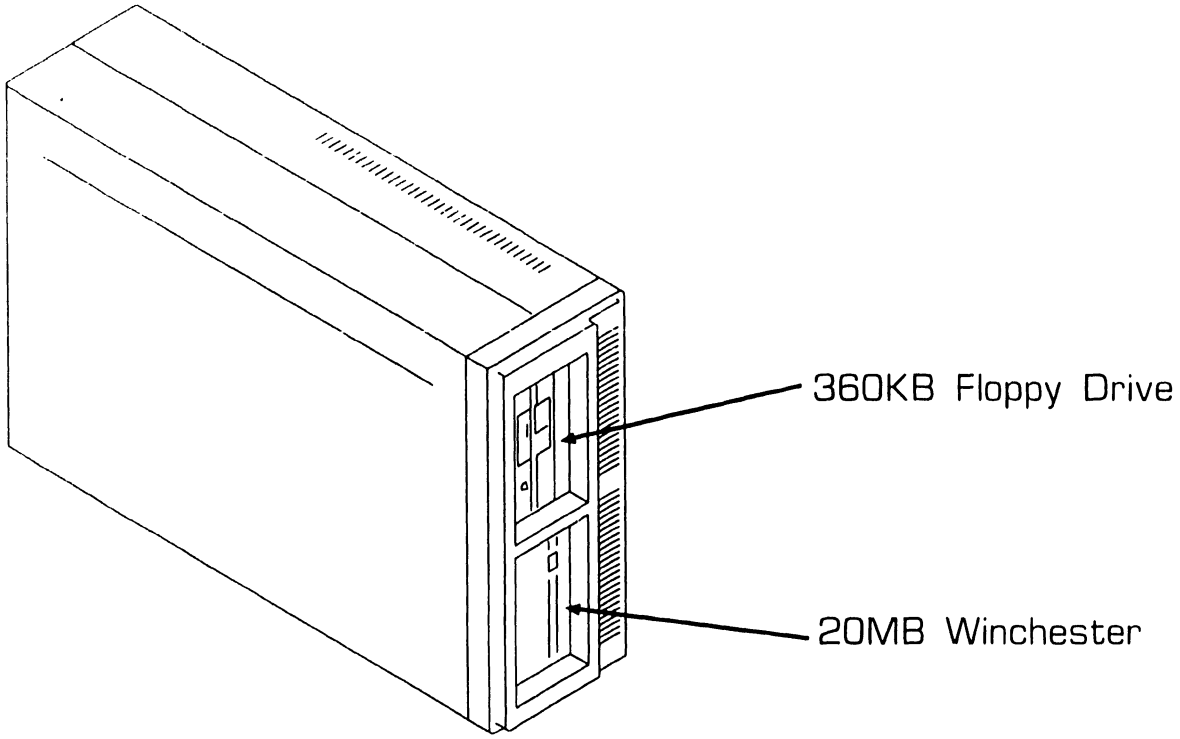

● END

2.6 Support Control Unit (PC) Major Parts (Rear View)

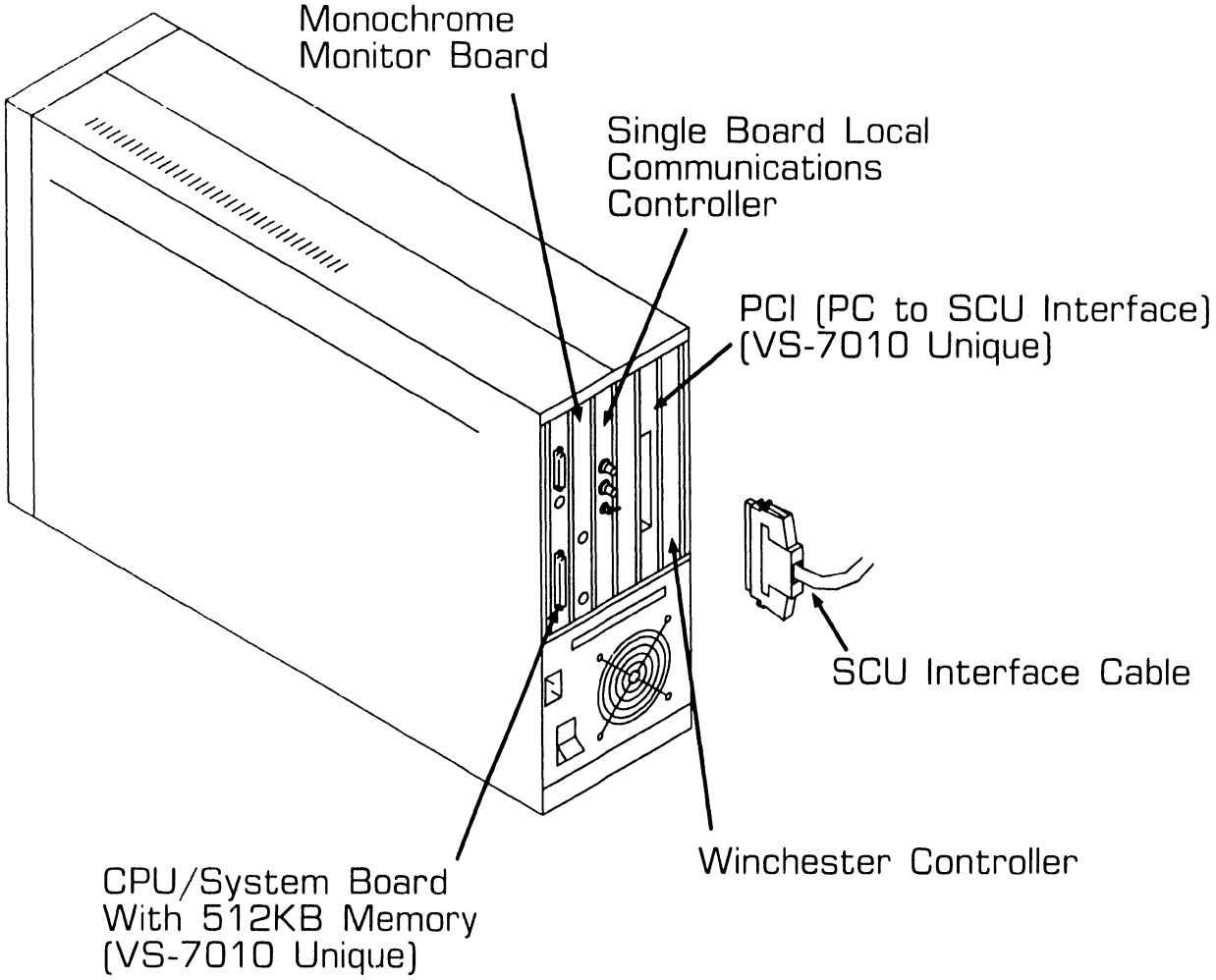

● END

SECTION 3

CONTROLS AND INDICATORS

SECTION 3 CONTENTS

SECTION 3

CONTROLS AND INDICATORS

Page

3.1 OPERATOR CONTROLS 3-1
3.1.1 VS-7010 Front Panel Controls 3-1
3.1.2 VS-7010 Rear Panel Controls 3-2
3.1.3 Optional 6550 Gate Array Assembly Controls 3-3
3.1.4 SCU (Professional Computer) Rear Panel Controls 3-4
3.1.5 SCU (PM-004L) Monitor Controls 3-5

3.2 OPERATOR INDICATORS 3-6
3.2.1 VS-7010 Front Panel Indicators 3-6
3.2.2 Optional 6550 Gate Array Assembly (3270 Operation) Indicators 3-7
3.2.3 Optional 6550 Gate Array Assembly (WSN Operation) Indicators 3-8
3.2.4 Optional 6550 Gate Array Assembly (Teletex Operation) Indicators 3-9
3.2.5 Optional Multiline TC Panel (RS232) Indicators 3-10
3.2.6 Optional Multiline TC Panel (RS366) Indicators 3-11
3.2.7 Optional Multiline TC Panel (X.21) Indicators 3-12
3.2.8 Optional Multiline TC Panel (RS449) Indicators 3-13
3.2.9 SCU (Professional Computer) Front Panel Indicators 3-14

3.3 SERVICE CONTROLS 3-15
3.3.1 Multioutput Switching Power Supply Controls 3-15
3.3.2 Power Supply Controller Board Controls 3-16
3.3.3 Serial IOC (23V67) Controls 3-18
3.3.4 SMD IOC (23V98-4) Controls 3-19
3.3.5 Optional High-Speed SMD IOC (70V98-4A) Controls 3-20
3.3.6 Kennedy Tape IOC (23V95-1) Controls 3-21

SECTION 3 CONTENTS

SECTION 3

CONTROLS AND INDICATORS (CONT.)

Page

3.3.7 Telex Tape IOC (23V95-2) Controls 3-22
3.3.8 Multiline TC IOC (23V86/96) Controls 3-23
3.3.9 Optional 6550 Gate Array Assembly Controls 3-24

3.4 SERVICE INDICATORS 3-25
3.4.1 Power Controller Board Indicators 3-25

3 CONTROLS AND INDICATORS

3.1 Operator Controls

3.1.1 VS-7010 Front Panel Controls

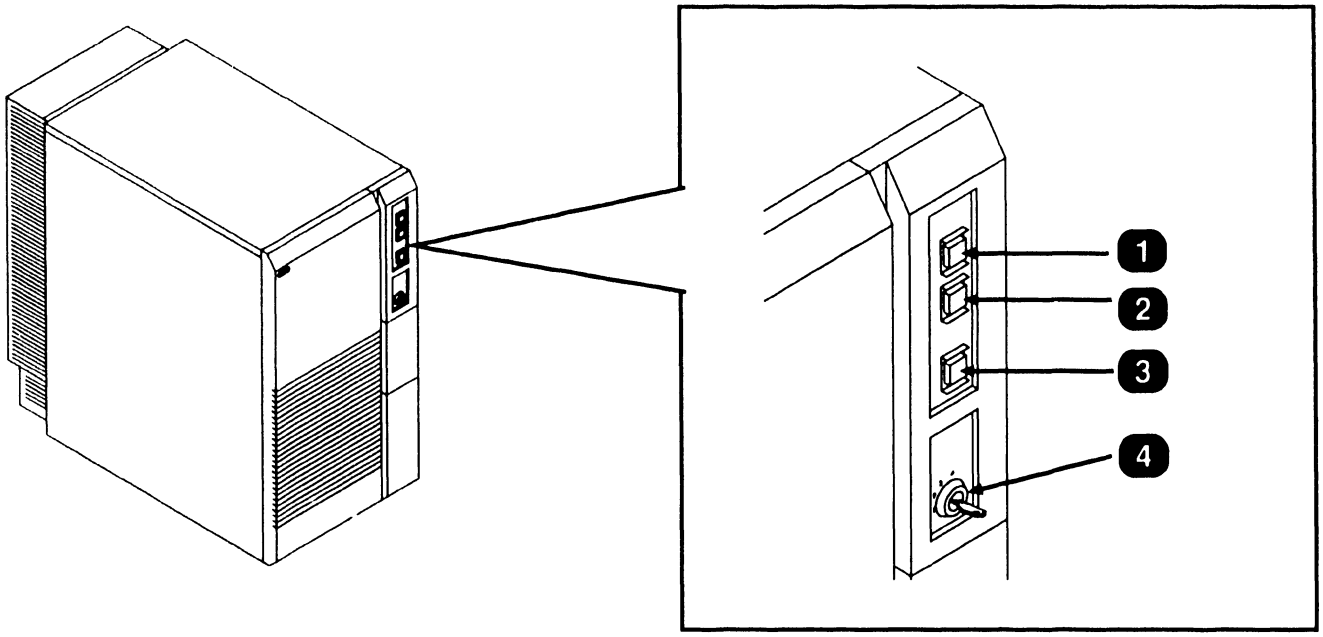

Item	*Name*	*Type and Function*
1	Power On Switch	Pushbutton switch; green lighted, pressing switch turns dc power on and illuminates switch.
2	Power Off Switch	Pushbutton switch; red lighted, pressing switch turns dc power off and illuminates switch.
3	System Reset Switch	Pushbutton switch; yellow, pressing switch resets system, clears main memory, and puts system in control mode.
4	Normal/Remote Switch	Four position key switch: Remote Service - allows remote diagnostics. Remote Admin. -allows RSAF operation. Normal Control -allows all control panel controls function when power on. Control Lock - disables power on.

● END

3 CONTROLS AND INDICATORS
3.1 Operator Controls

3.1.2 VS-7010 Rear Panel Controls

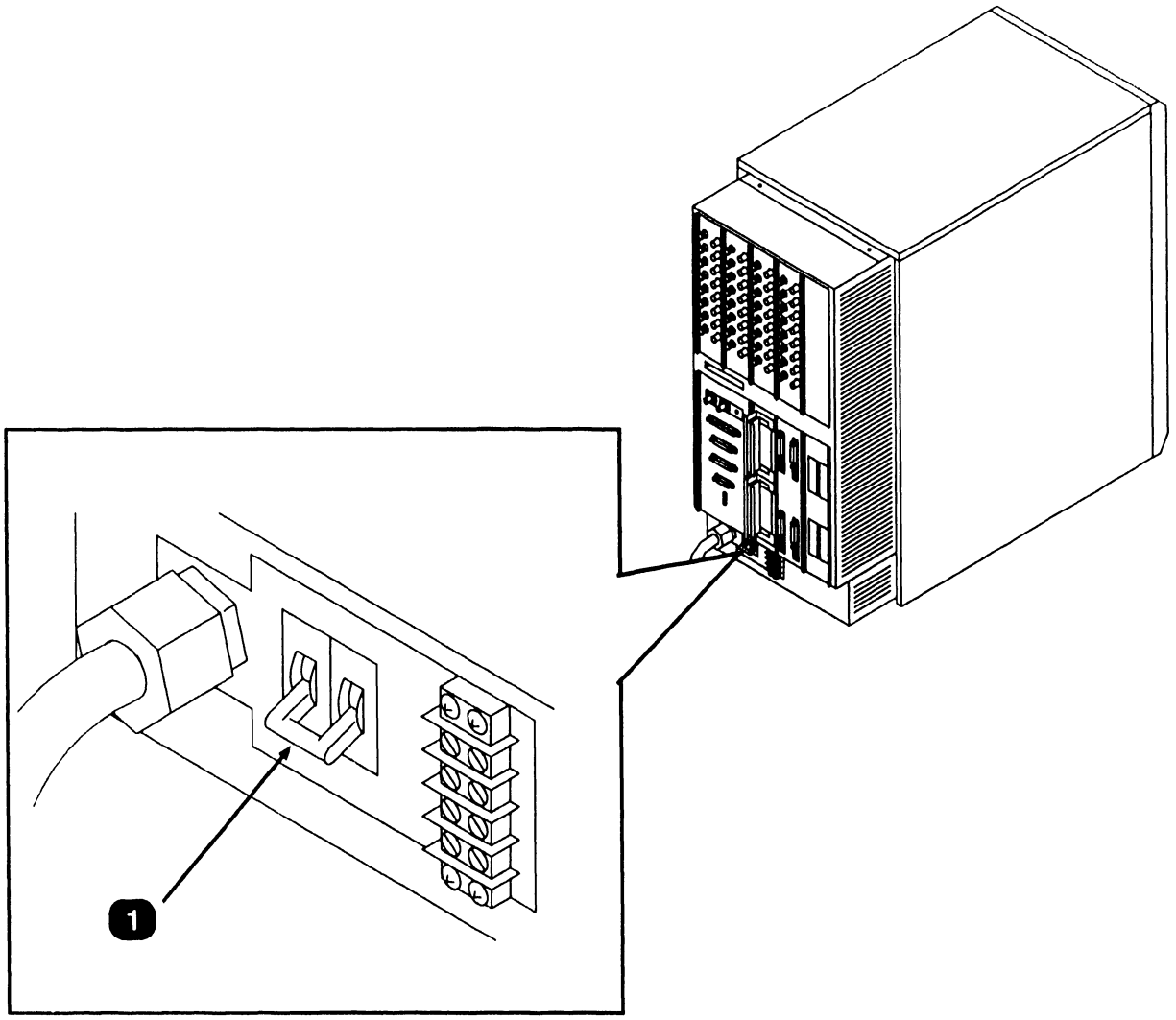

Item	*Name*	*Type and Function*
1	AC On/Off Circuit Breaker	Toggle switch; when ON, provides ac to power supply and power supply controller board. When OFF, disconnects ac power.

● END

3.1.3 Optional 6550 Gate Array Assembly Controls

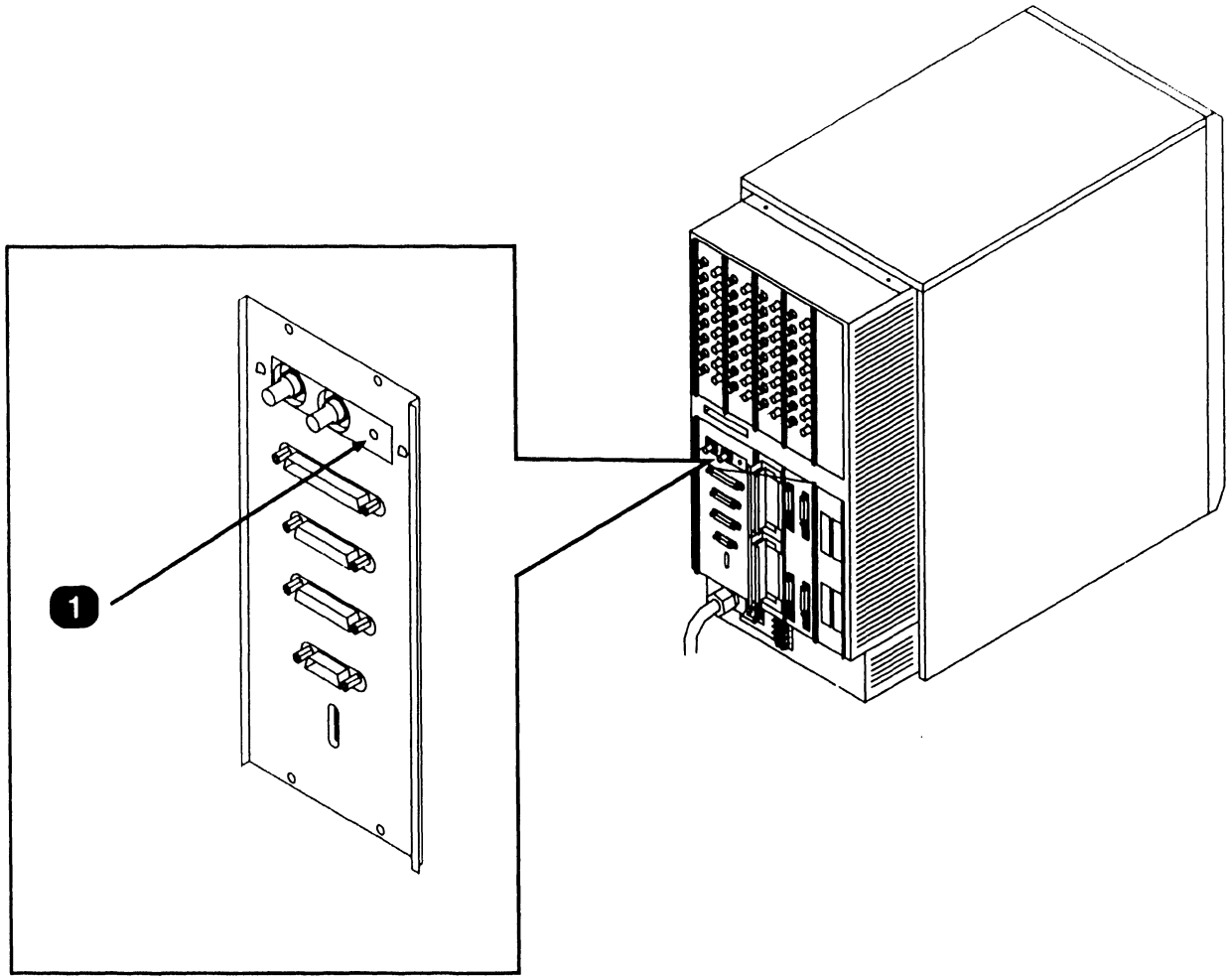

Item	*Name*	*Type and Function*
1	Gate Array Clear	Pushbutton switch; recessed, when pressed clears Gate Array Assembly and forces Gate Array re-IPL.

● END

3.1.4 SCU (Professional Computer) Rear Panel Controls

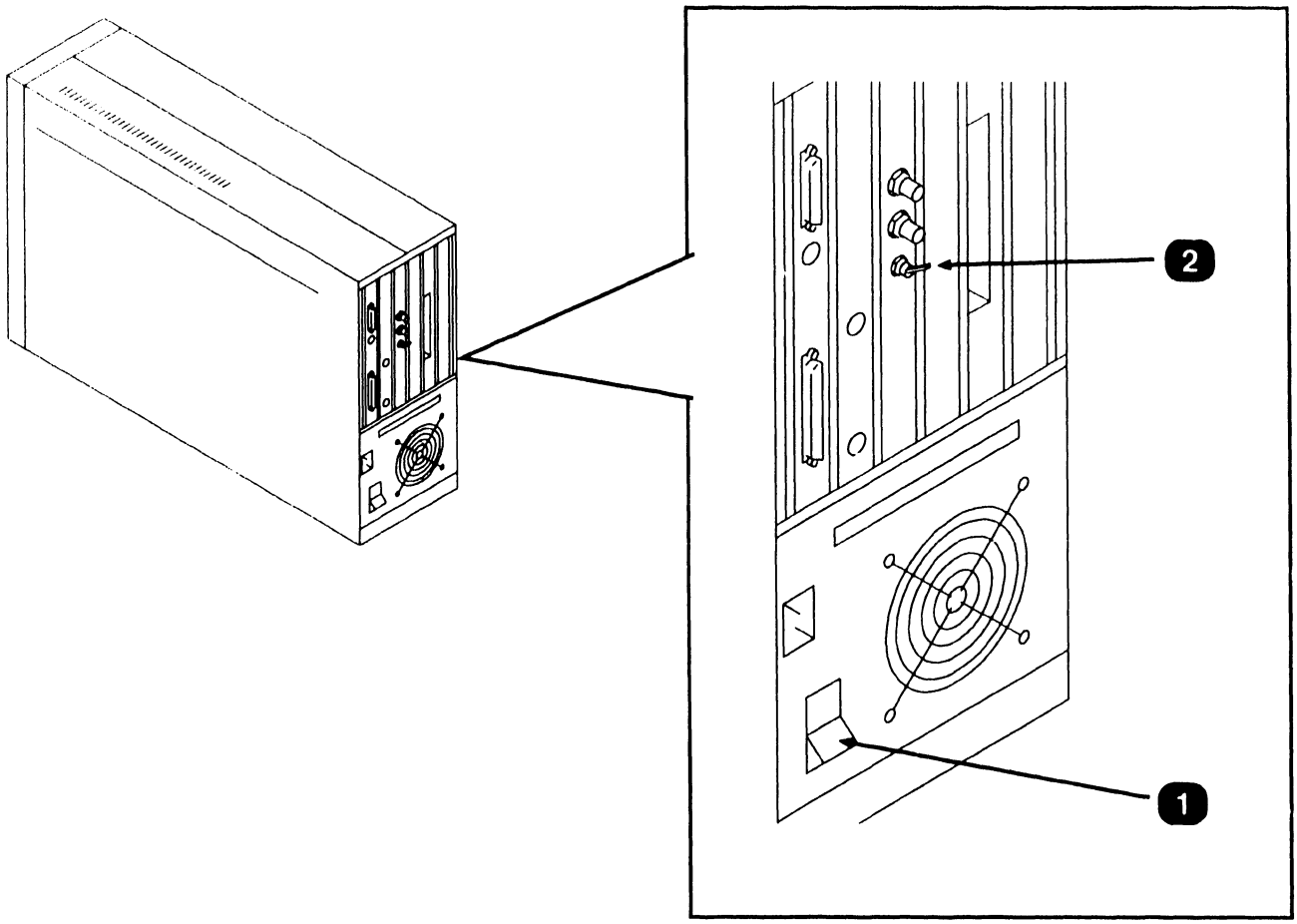

Item	*Name*	*Type and Function*
1	AC Power On/Off Switch	Toggle switch; when ON, provides ac power to power supply. When OFF, disconnects ac power.
2	Local Communications Data Link Remote/Local Switch	Two-position toggle switch; when in Local position, selects IPL operation. When in Remote position, selects workstation operation.

● END

3.1.5 SCU (PM-004L) Monitor Controls

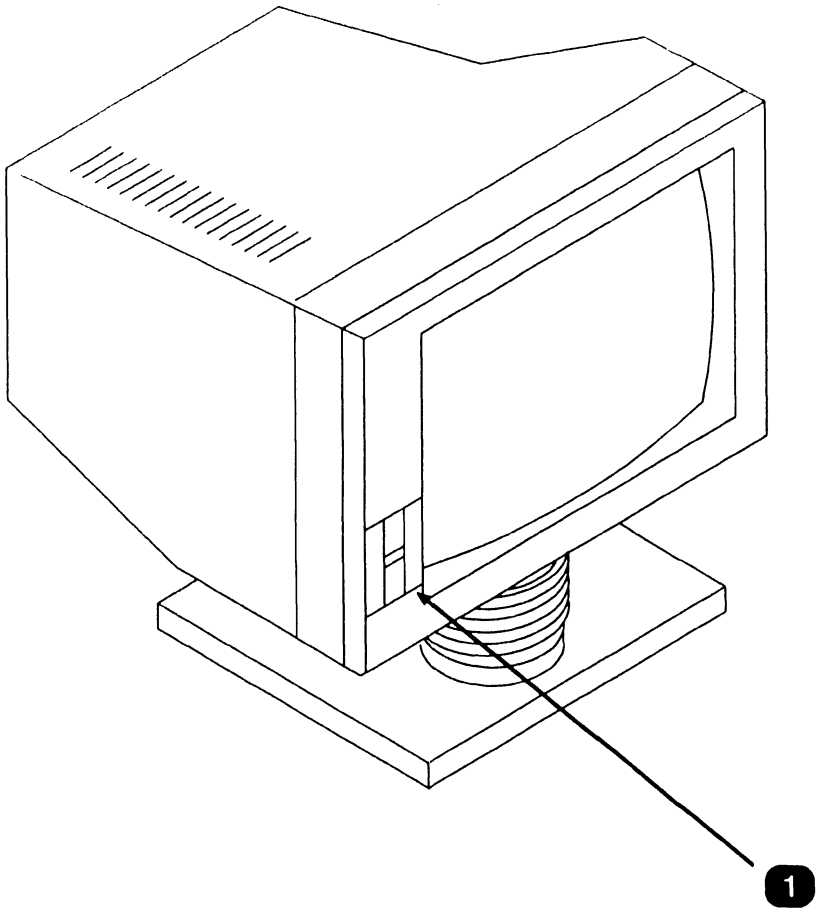

Item	*Name*	*Type and Function*
1	Slide Lever	Slide-type brightness control; moving lever upwards achieves maximum brightness. Moving lever downwards achieves minimum brightness.

● END

3 CONTROLS AND INDICATORS
3.2 Operator Indicators

3.2.1 VS-7010 Front Panel Indicators

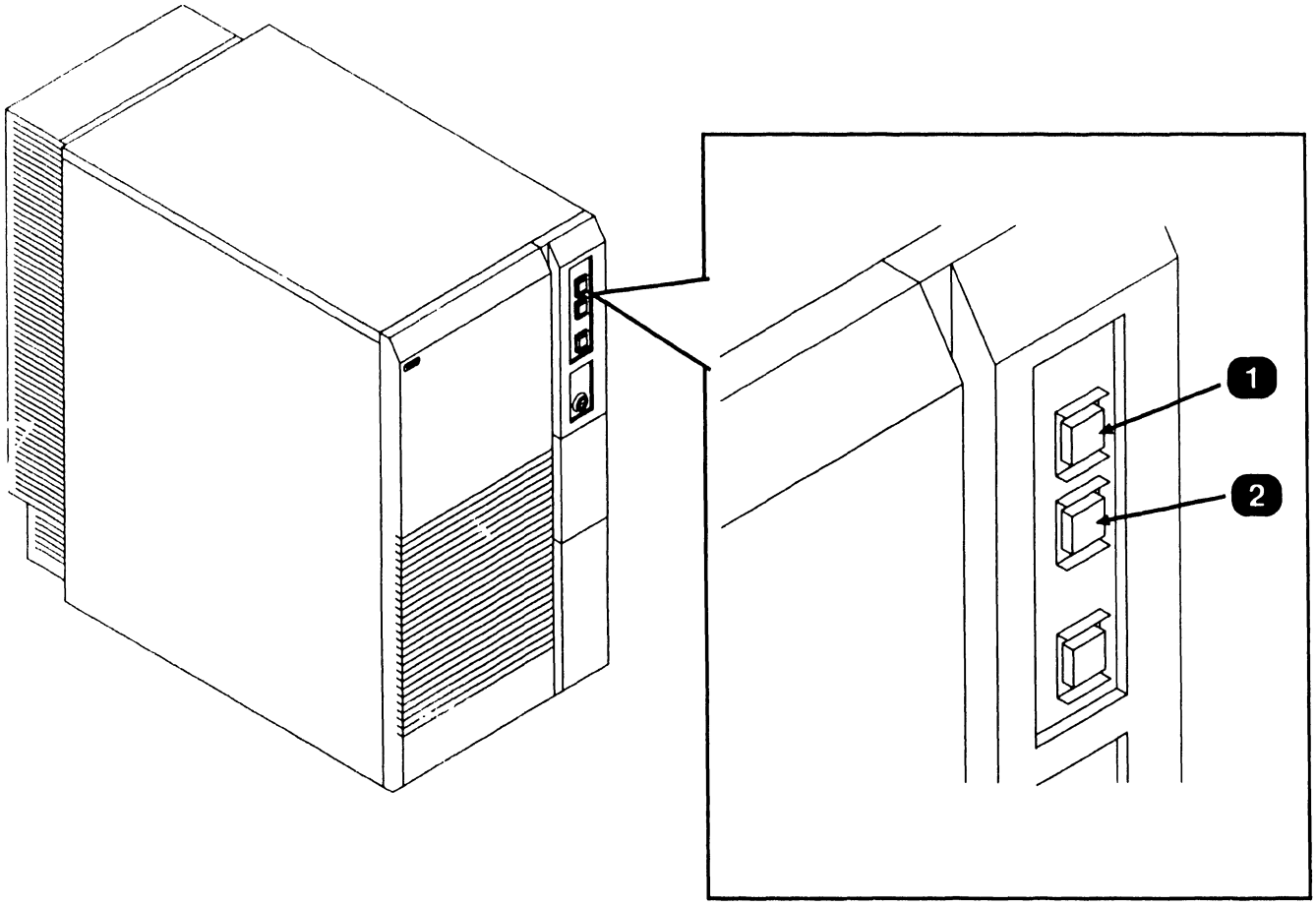

Item	*Name*	*Type and Function*
1	Power On Lamp	Lighted lens cap; green, when illuminated indicates dc power is on (normal indication).
2	Power Off Lamp	Lighted lens cap; red, when illuminated indicates dc power is off.

● END

3.2.2 Optional 6550 Gate Array Assembly (3270 Operation) Indicators

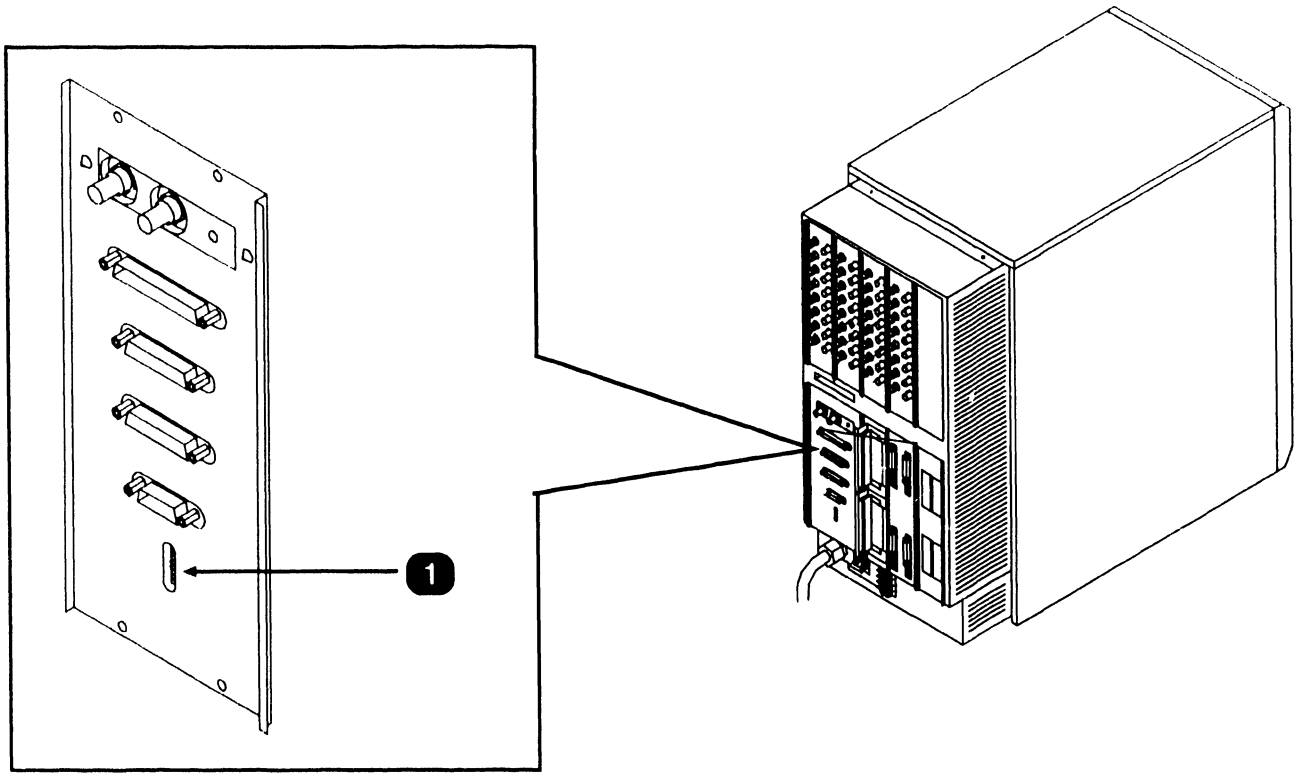

Item	*Name*	*Type and Function*
1	TC Activity LEDs	Eight LEDs; red, shows EIA interchange signals between modem and Gate Array Assembly. For 3270 operation, LEDs are defined as follows: LED1 Received Data LED2 Transmitted Data LED3 Clear-to-Send LED4 Request-to-Send LED5 Data Carrier Detect LED6 Data Terminal Ready LED7 Data Set Ready LED8 Power Indicator

● END

3.2.3 Optional 6550 Gate Array Assembly (WSN Operation) Indicators

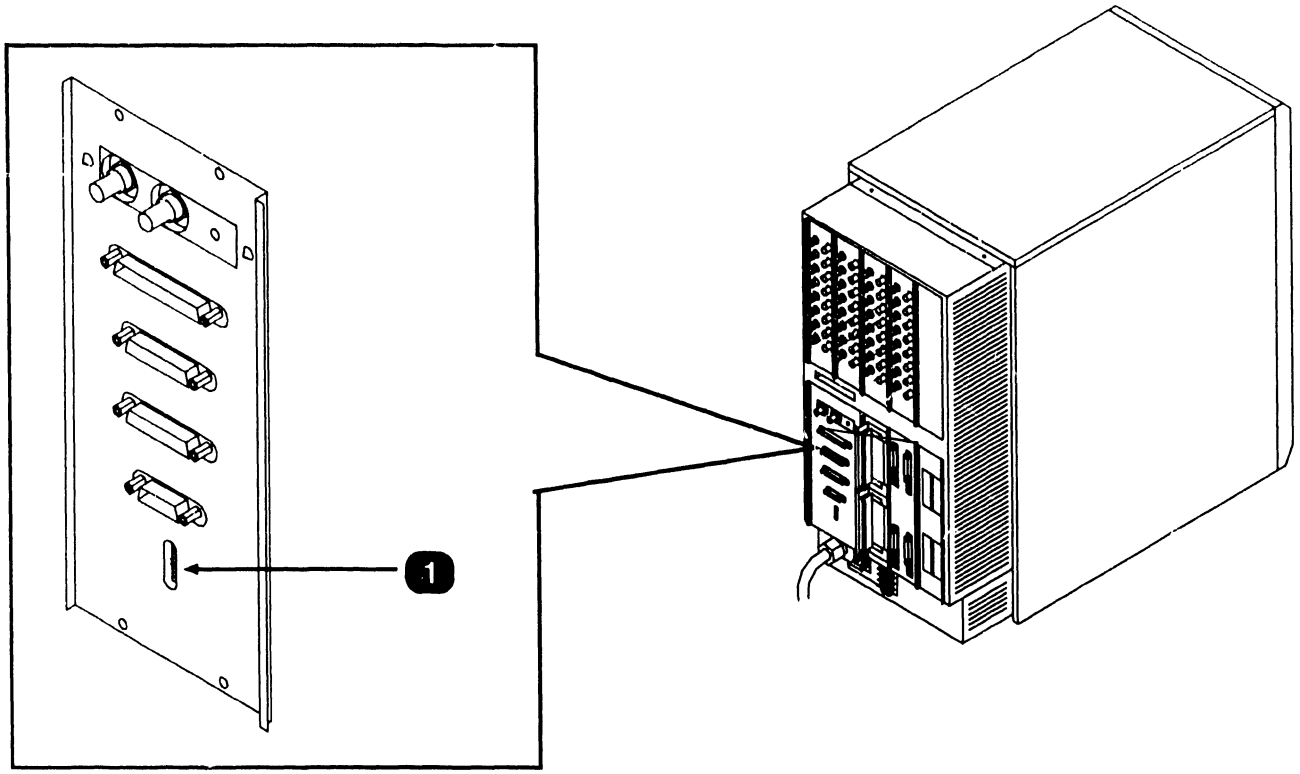

Item	*Name*	*Type and Function*
1	TC Activity LEDs	Eight LEDs; red, shows EIA interchange signals between modem and Gate Array Assembly. For WSN operation (Point-to-Point and Multipoint operation), LEDs are defined as follows: LED1 System Activity LED2 Receive Valid Data LED3 Transmitter Active LED4 Data Carrier Detect LED5 Virtual Circuit Active LED6 Activity to VS LED7 TC Controller Refusing New Traffic LED8 Diagnostic Mode

● END

3.2.4 Optional 6550 Gate Array Assembly (Teletex Operation) Indicators

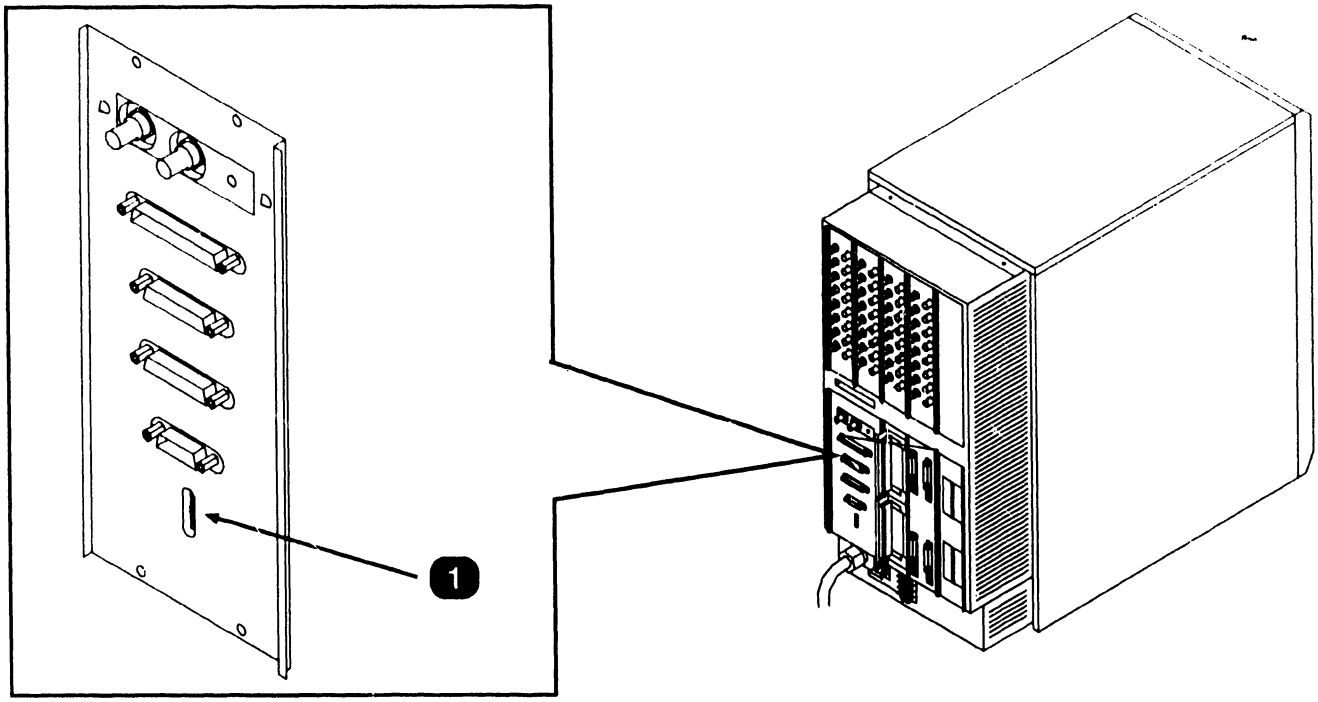

Item	*Name*	*Type and Function*
1	TC Activity LEDs	Eight LEDs; red, shows EIA interchange signals between modem and Gate Array Assembly. For Teletex operation, LEDs are defined as follows: LED1 Document Received LED2 Receive Memory Full LED3 Not Used LED4 Not Used LED5 Transmitting Document LED6 Receiving Document LED7 O.S. Code Active (Blinks at 3 second intervals) LED8 Normal Operation (Blinks for hardware problems or fatal software error)

● END

3.2.5 Optional Multiline TC Panel (RS232) Indicators

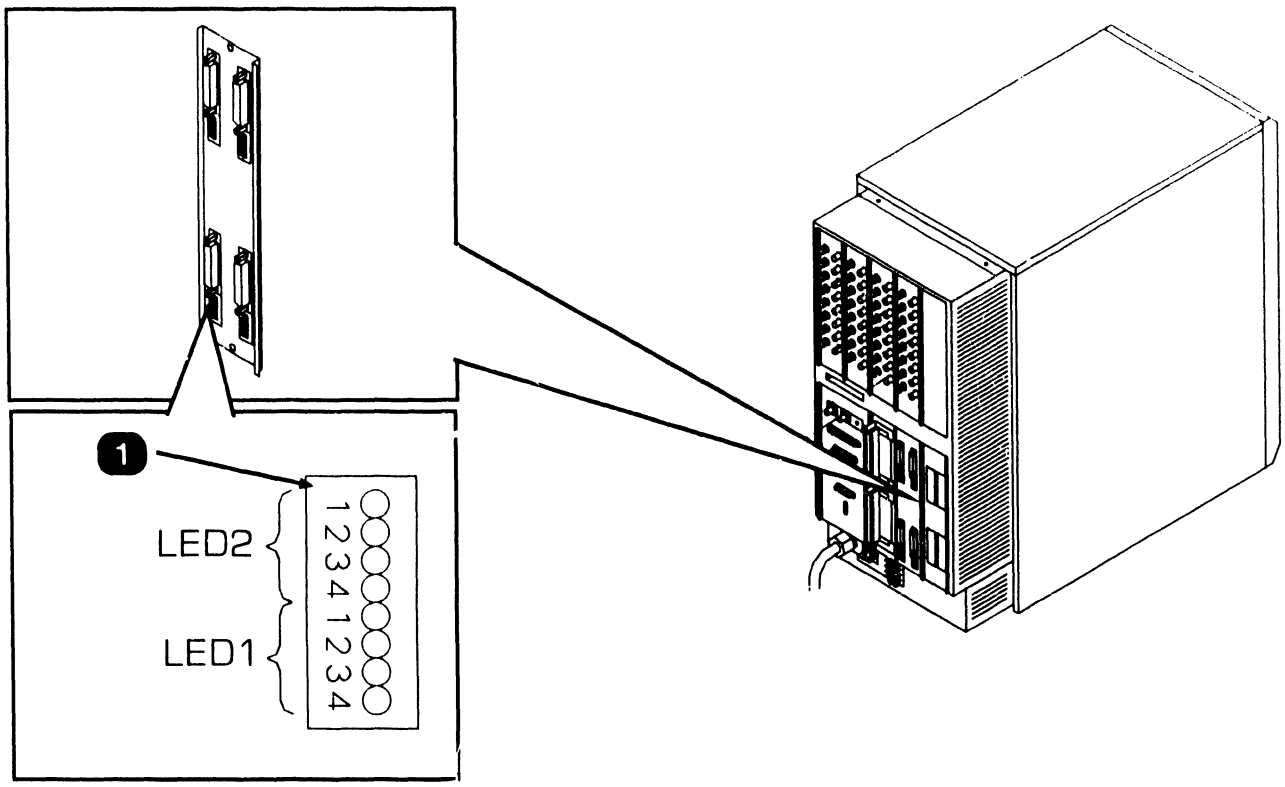

Item	*Name*	*Type and Function*
1	TC Activity LEDs	Eight LEDs; red, shows EIA interchange signals between modem and Multiline TC panel. For RS232 operation, LEDs are defined as follows: LED2-1 Data Set Ready LED2-2 Data Terminal Ready LED2-3 Carrier Detect LED2-4 Software Controlled (Off if BIT failed) LED1-1 Transmitting Data LED1-2 Request-to-Send LED1-3 Clear-to-Send LED1-4 Received Data

● END

3.2.6 Optional Multiline TC Panel (RS366) Indicators

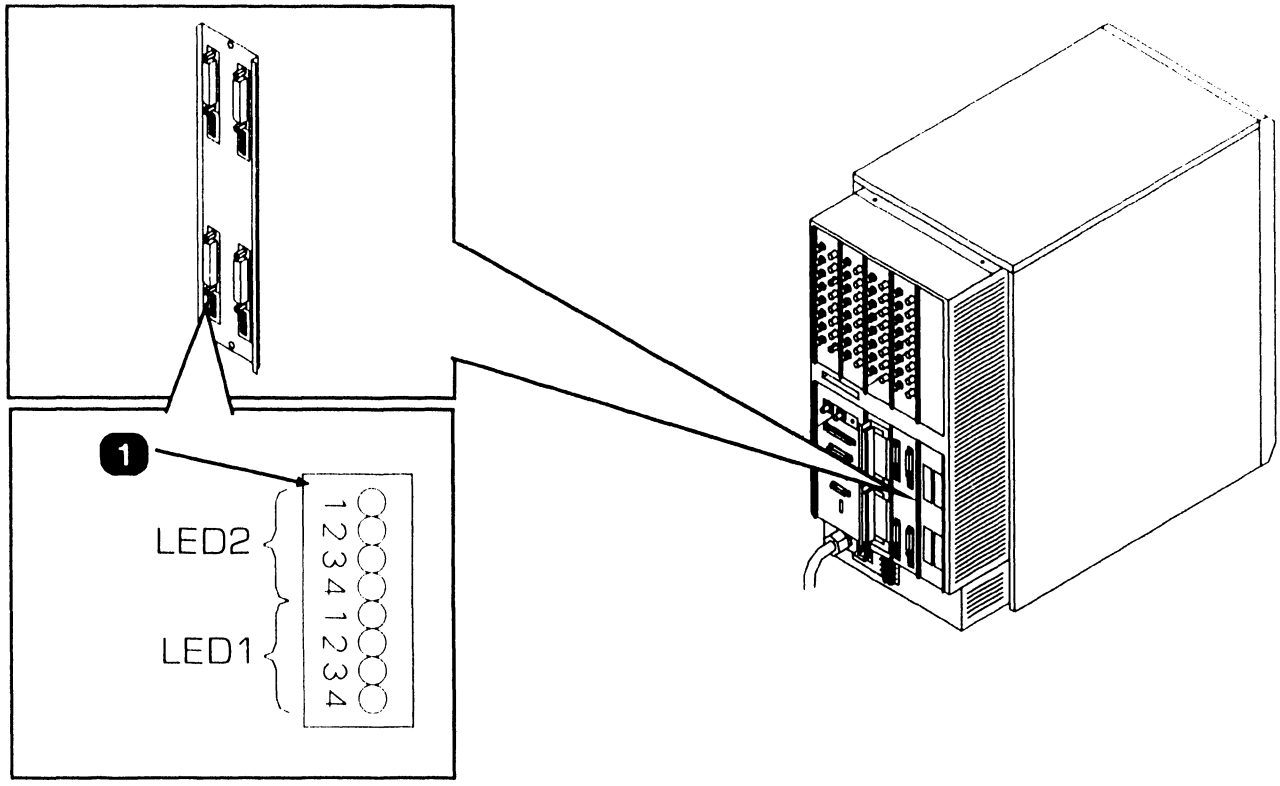

Item	*Name*	*Type and Function*
1	TC Activity LEDs	Eight LEDs; red, shows EIA interchange signals between modem and Multiline TC panel. For RS366 operation, LEDs are defined as follows: LED2-1 Data Line Occupied LED2-2 Call Origination Status LED2-3 Present Next Digit LED2-4 Abandon Call and Retry LED1-1 Digit Present LED1-2 Call Request Present LED1-3 Software Controlled LED1-4 Not Used (Masked)

● END

3.2.7 Optional Multiline TC Panel (X.21) Indicators

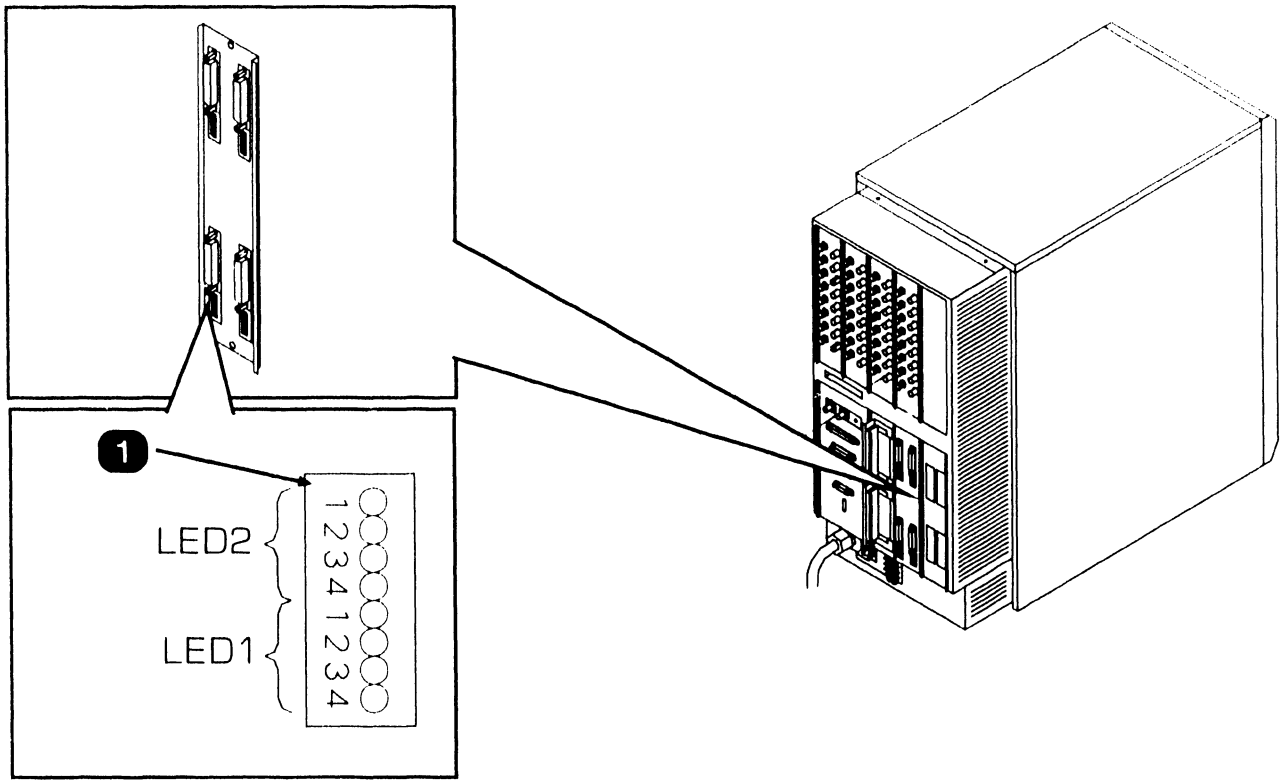

Item	*Name*	*Type and Function*
1	TC Activity LEDs	Eight LEDs; red, shows EIA interchange signals between modem and Multiline TC panel. For X.21 operation, LEDs are defined as follows: LED2-1 Transmitted Data LED2-2 Data Terminal Ready LED2-3 Received Data LED2-4 Indication LED1-1 Software Controlled LED1-2 Not Used LED1-3 Not Used LED1-4 Not Used

● END

3.2.8 Optional Multiline TC Panel (RS449) Indicators

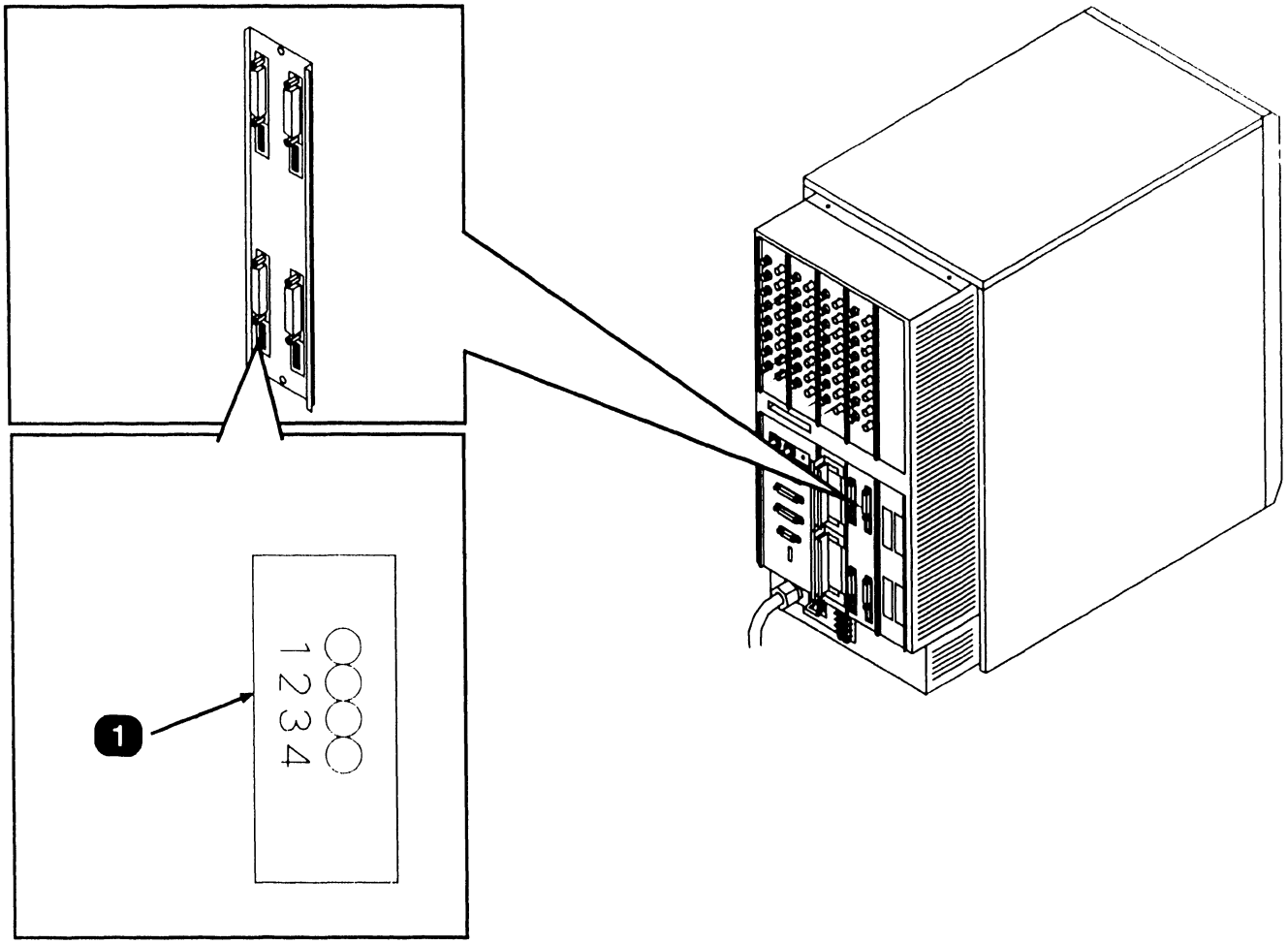

Item	*Name*	*Type and Function*
1	TC Activity LEDs	Four LEDs; red, shows EIA interchange signals between modem and Multiline TC panel. For RS449 operation, LEDs are defined as follows: LED1 Carrier Detected LED2 Clear-to-Send LED3 Not Used LED4 Not Used

● END

3.2.9 SCU (Professional Computer) Front Panel Indicators

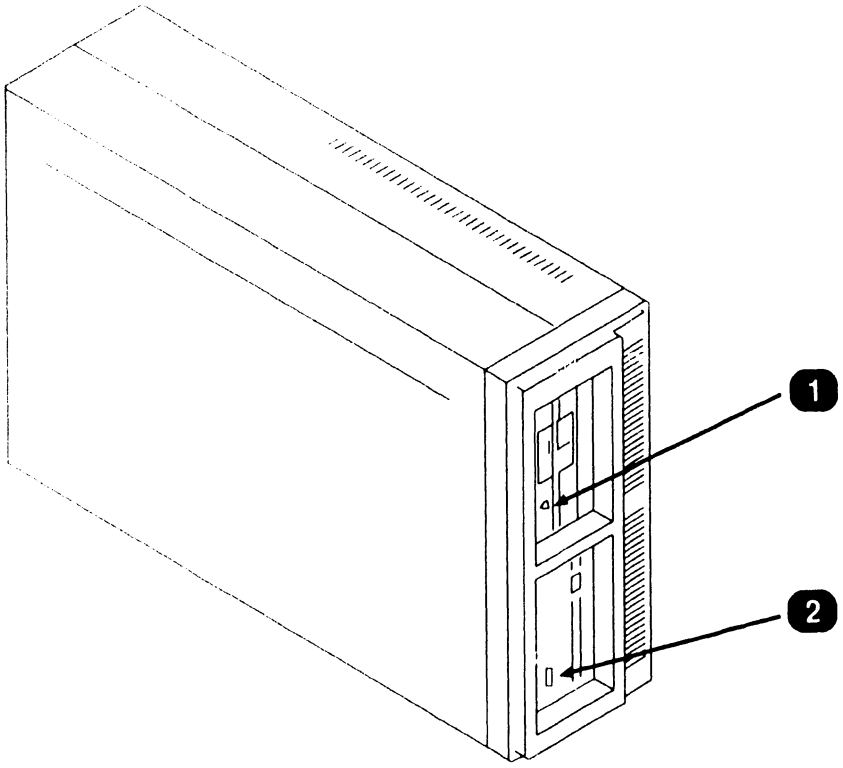

Item	*Name*	*Type and Function*
1	Diskette Drive Activity LED	LED; red, illuminates to indicate diskette drive activity (search/read/write).
2	Disk Drive Activity LED	LED; red, illuminates to indicate disk drive activity (search/read/write).

● END

3 CONTROLS AND INDICATORS
3.3 Service Controls

3.3.1 Multioutput Switching Power Supply Controls

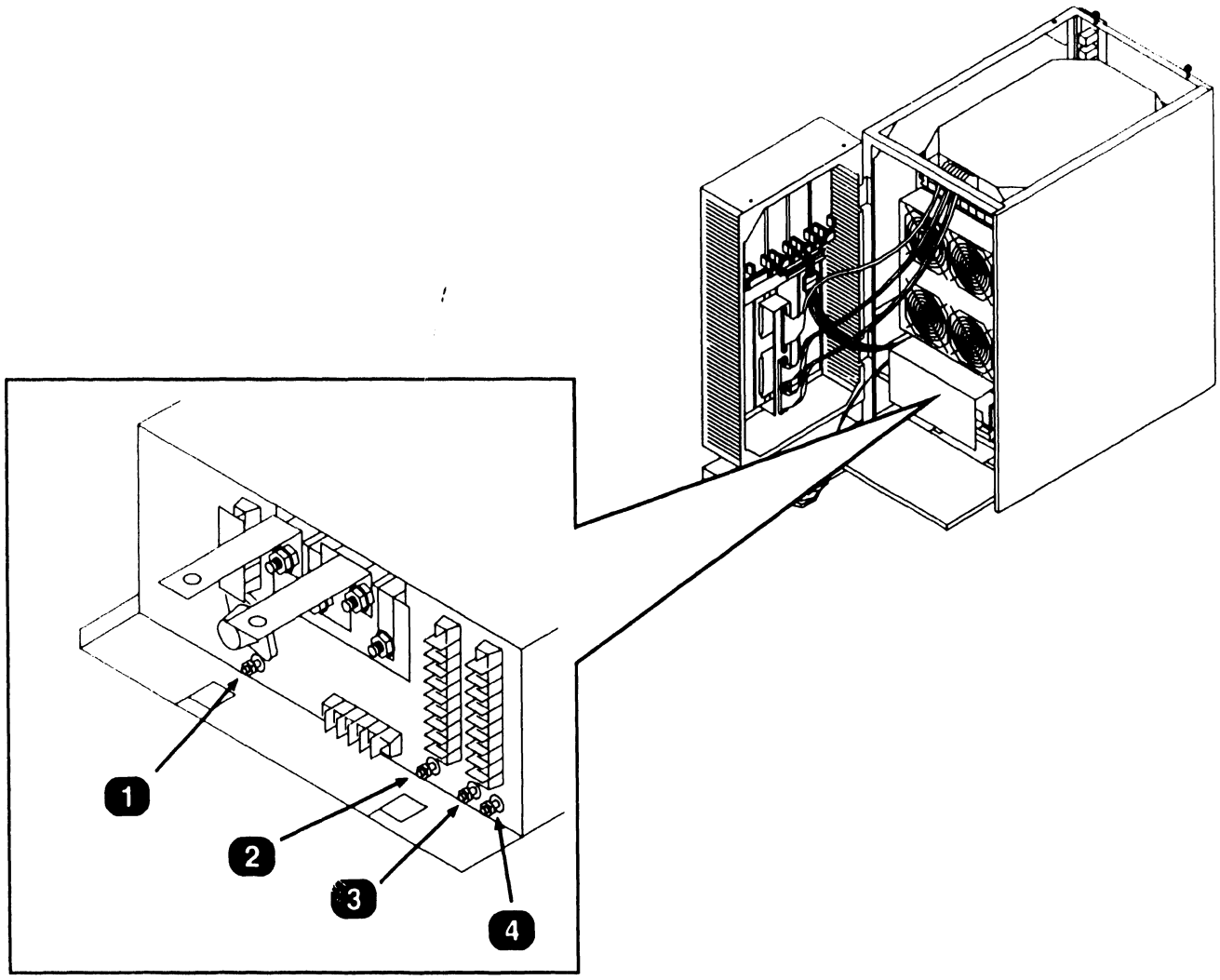

Item	*Name*	*Type and Function*
1	V1 (+5V Adjust)	Potentiometer, adjustment for +5 Vdc.
2	V2 (+12V Adjust)	Potentiometer, adjustment for +12 Vdc.
3	V3 (-5V Adjust)	Potentiometer, adjustment for -5 Vdc.
4	V4 (-12V Adjust)	Potentiometer, adjustment for -12 Vdc.

● END

3.3.2 Power Supply Controller Board Controls (Sheet 1 of 2)

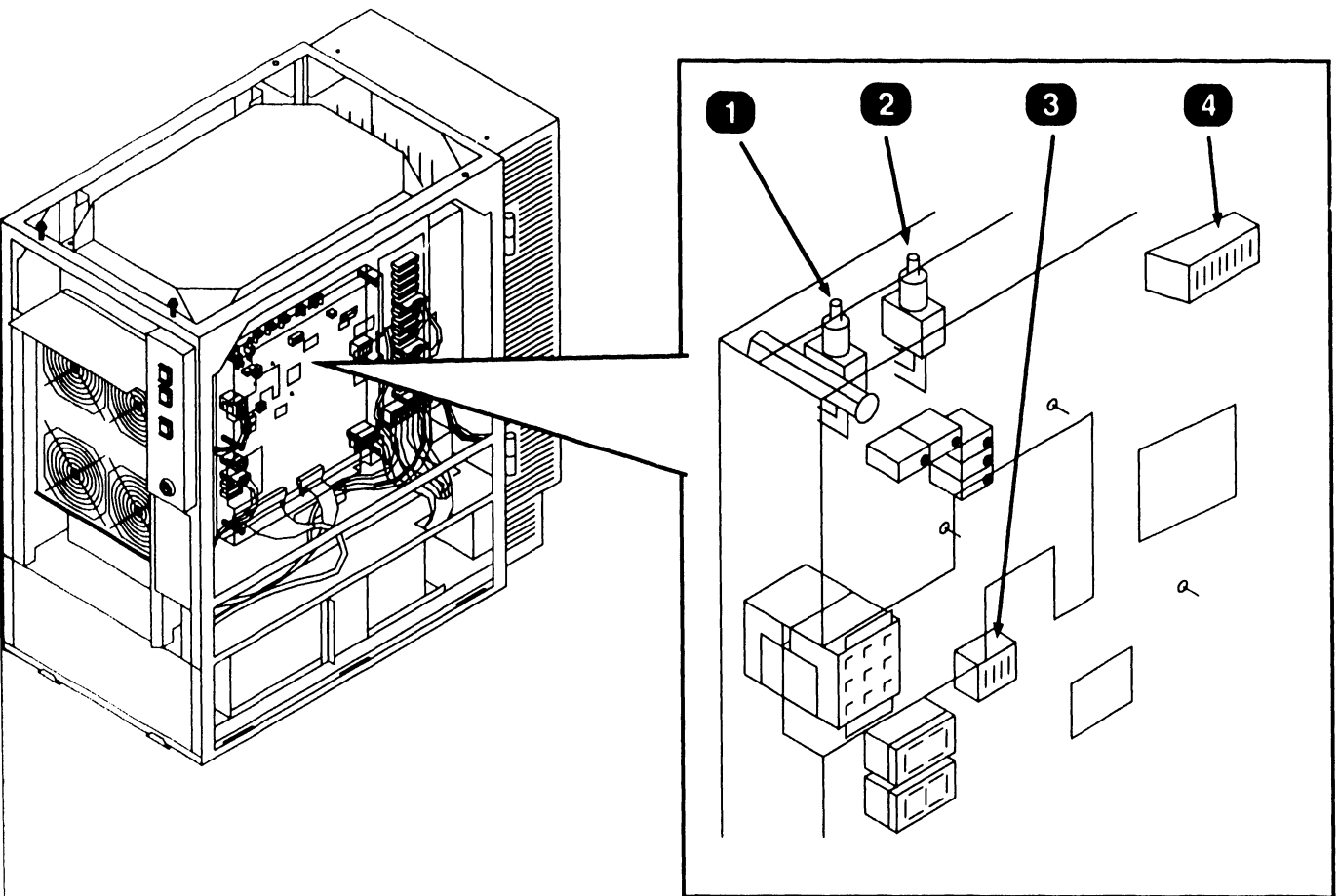

Item	Name	Type and Function
1	DC Power On (S1)	Pushbutton switch; when pressed turns dc power on.
2	DC Power Off (S2)	Pushbutton switch; when pressed turns dc power off.
3	Voltage Address (SW3)	Rocker-type 4-bit switch bank; addresses power controller board hex display for zeroing A/D converters. (➡8.2.2)
4	Switch SW4	Not Used.

➡NEXT

3.3.2 Power Supply Controller Board Controls (Sheet 2 of 2)

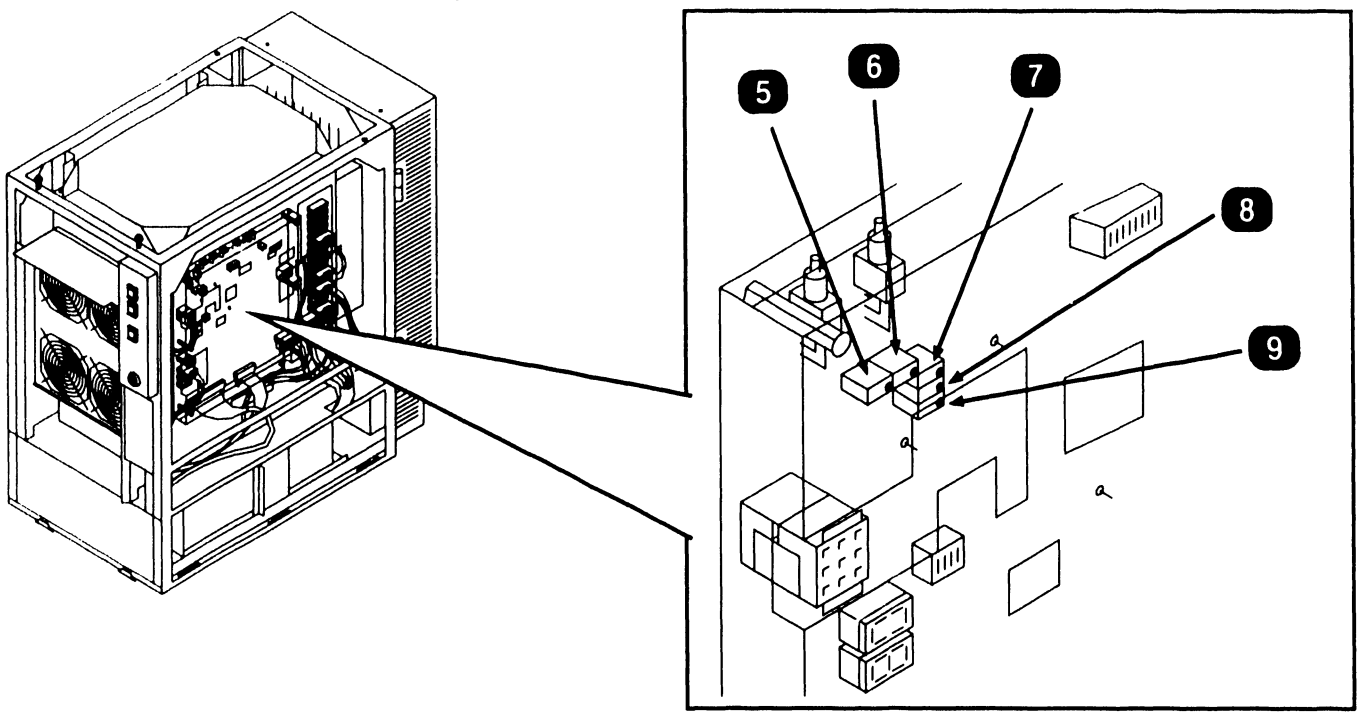

Item	*Name*	*Type and Function*
5	R19 +5AV Calibrate	Potentiometer; calibrates A/D convertor for +5AV. Used with Voltage Address switch SW3. (➡8.2.2)
6	R18 +12V Calibrate	Potentiometer; calibrates A/D convertor for +12A. Used with Voltage Address switch SW3. (➡8.2.2)
7	R20 +5BV Calibrate	Potentiometer; not used.
8	R21 -5V Calibrate	Potentiometer; calibrates A/D convertor for -5V. Used with Voltage Address switch SW3. (➡8.2.2)
9	R22 -12V Calibrate	Potentiometer; calibrates A/D convertor for -12V. Used with Voltage Address switch SW3. (➡8.2.2)

● END

3.3.3 Serial IOC (23V67) Controls

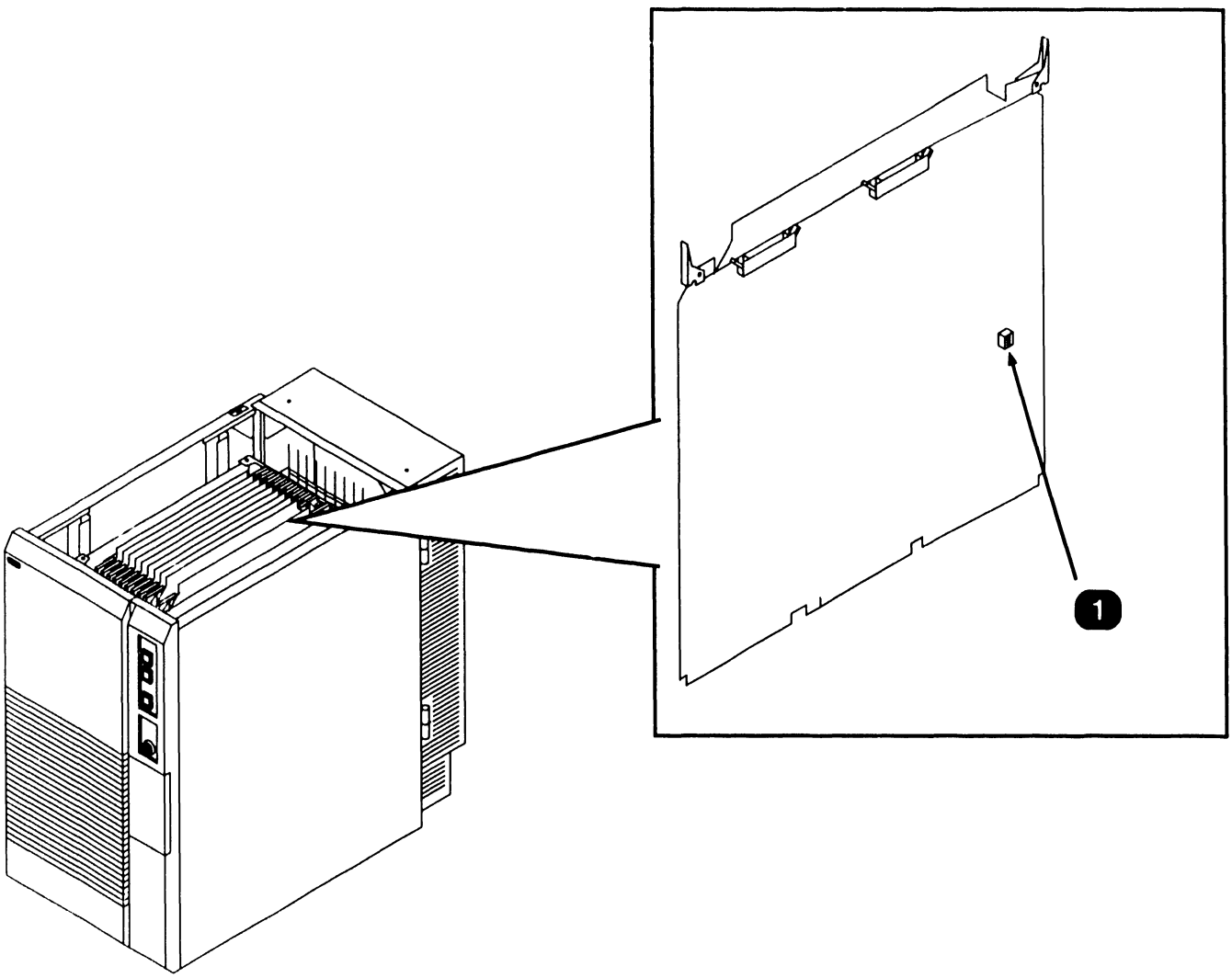

Item	*Name*	*Type and Function*
1	Diagnostic Switch L194	Rocker-type 4-bit switch bank; selects various diagnostic tests when used in conjunction with the I/O Built-In-Test Monitor. (➡6.3.1, 7.2.15)

● END

3.3.4 SMD IOC (23V98-4) Controls

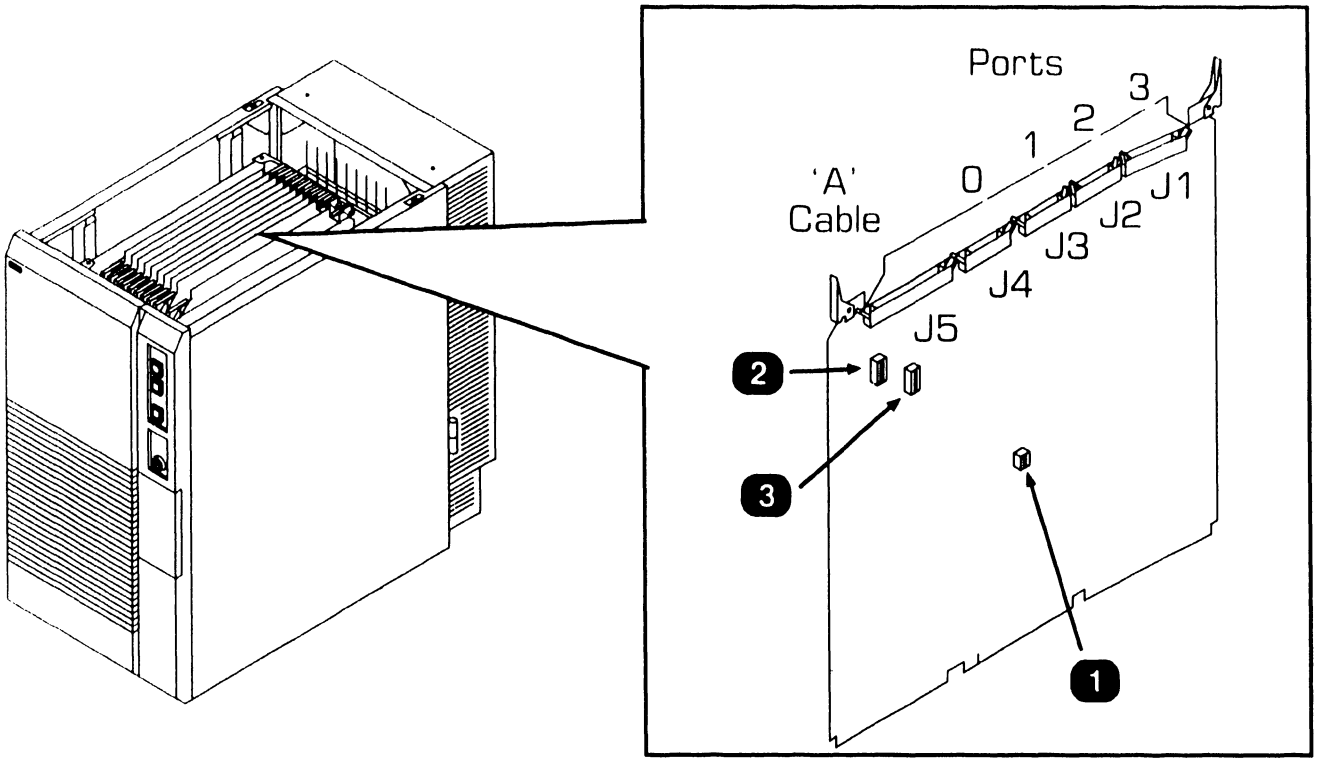

Item	*Name*	*Type and Function*
1	Diagnostic Switch L247	Rocker-type 4-bit switch bank, selects various diagnostic tests when used in conjunction with the I/O Built-In-Test Monitor. (➡6.3.2, 7.2.14)
2	Drive Type/Port Select Switch L51 (SW1)	Rocker-type 8-bit switch bank, selects external drive-type for Port 0 and 1. Switches SW1-1 thru SW1-4 select drive 0, Port 0. Switches SW1-5 thru SW1-8 select drive 1, Port 1. (➡7.2.14)
3	Drive Type/Port Select Switch L76 (SW2)	Rocker-type 8-bit switch bank, selects external drive-type for Port 2 and 3. Switches SW2-1 thru SW2-4 select drive 2, Port 2. Switches SW2-5 thru SW2-8 select drive 3, Port 3. (➡7.2.14)

● END

3.3.5 Optional High-Speed SMD IOC (70V98-4A) Controls

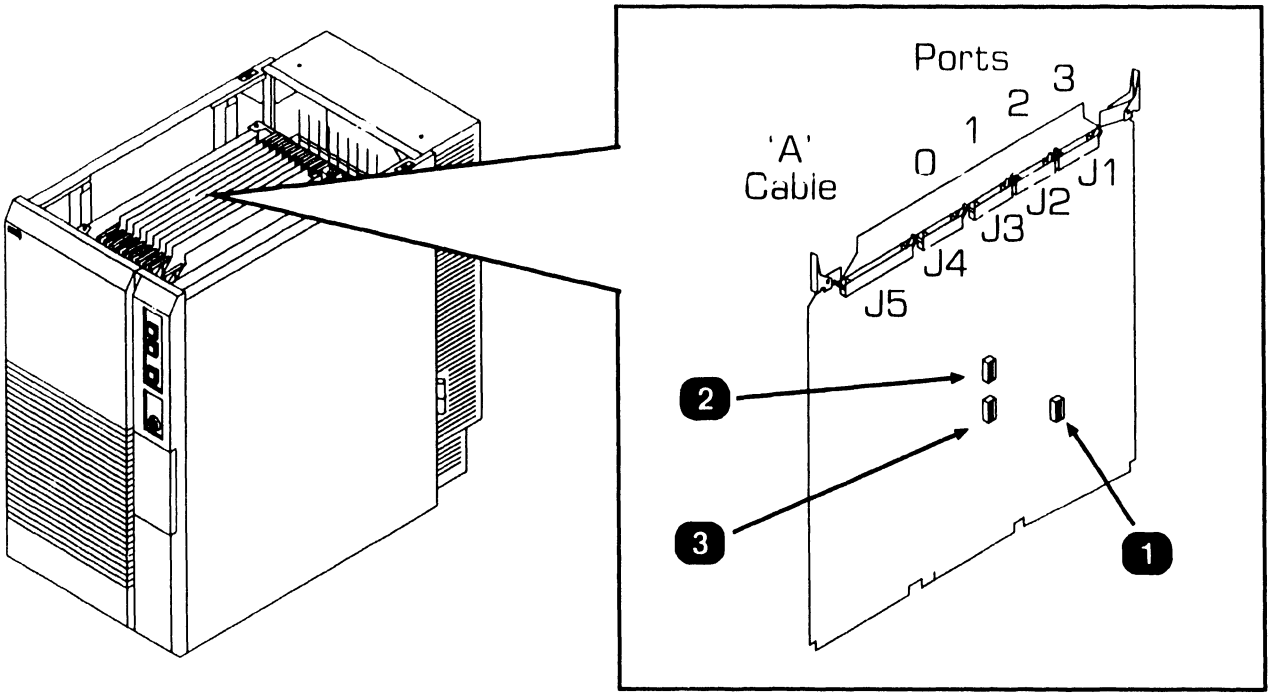

Item	*Name*	*Type and Function*
1	Diagnostic Switch (SW2)	Rocker-type 8-bit switch bank; selects various diagnostic tests when used in conjunction with the I/O Built-In-Test Monitor. (➡6.3.3, 7.2.37)
2	Drive Type/Port Select Switch (SW1)	Rocker-type 8-bit switch bank; selects external drive-type for Port 2 and 3. Switches SW1-1 thru SW1-4 select drive 3, Port 3. Switches SW1-5 thru SW1-8 select drive 2, Port 2. (➡7.2.37)
3	Drive Type/Port Select Switch (SW3)	Rocker-type 8-bit switch bank; selects external drive-type for Port 0 and 1. Switches SW2-1 thru SW2-4 select drive 0, Port 0. Switches SW2-5 thru SW2-8 select drive 1, Port 1. (➡7.2.37)

● END

3.3.6 Kennedy Tape IOC (23V95-1) Controls

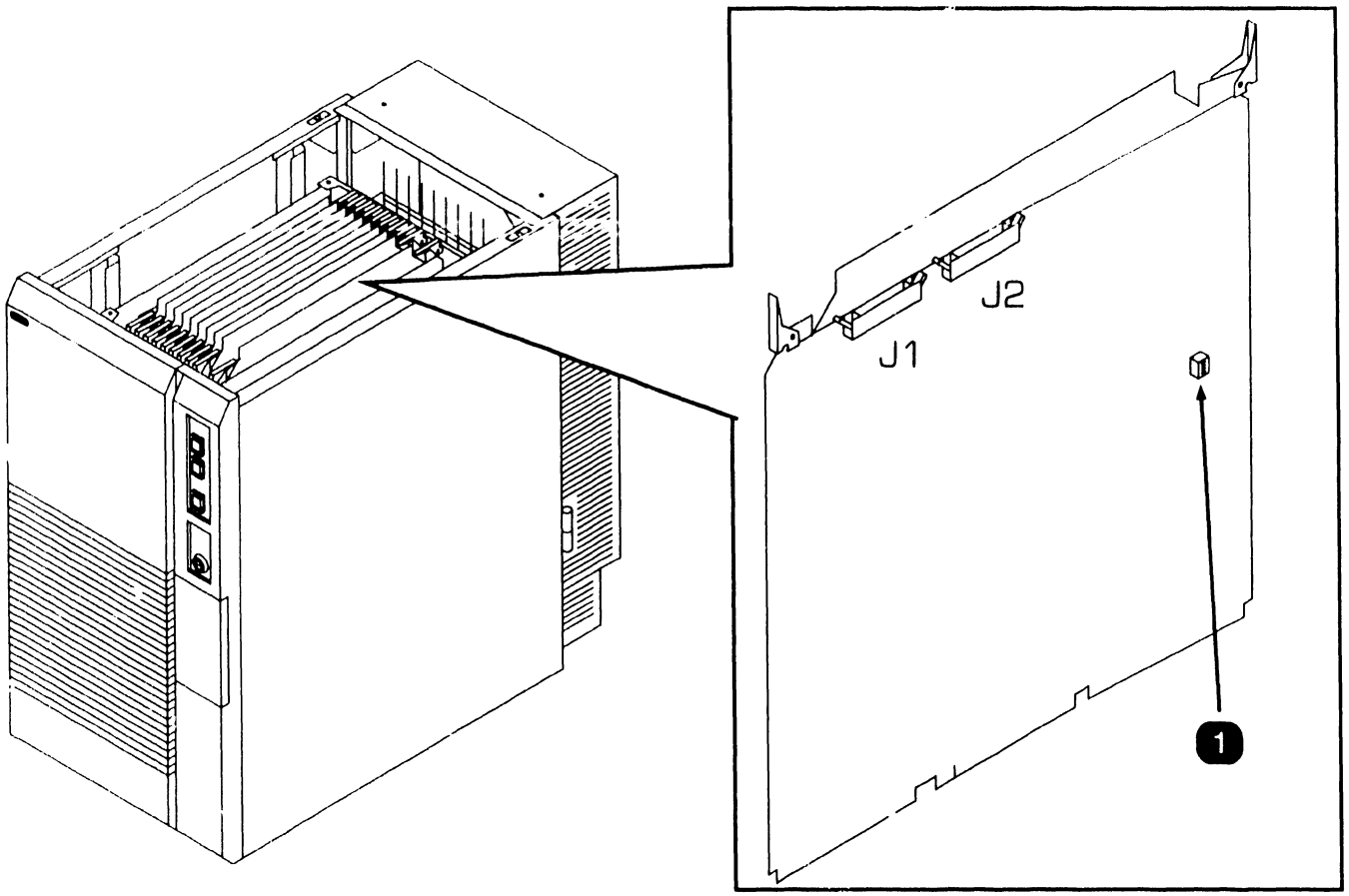

Item	*Name*	*Type and Function*
1	Diagnostic Switch L130	Rocker-type 4-bit switch bank; selects various diagnostic tests when used in conjunction with the I/O Built-In-Test Monitor. (➡6.3.4, 7.2.16)

● END

3.3.7 Telex Tape IOC (23V95-2) Controls

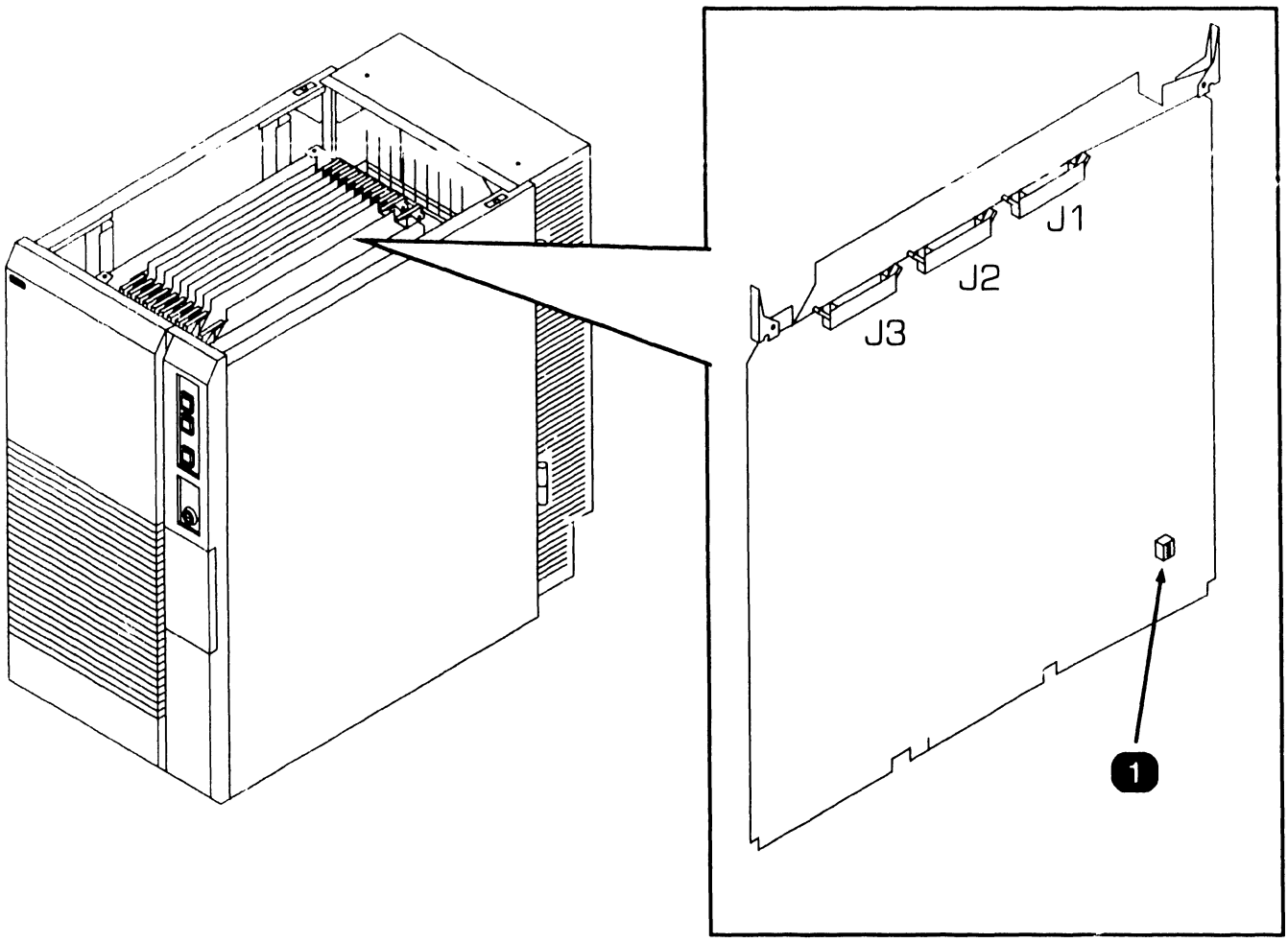

Item	*Name*	*Type and Function*
1	Diagnostic Switch SW1	Rocker-type 4-bit switch bank; selects various diagnostic tests when used in conjunction with the I/O Built-In-Test Monitor. (➡6.3.5, 7.2.17)

● END

3.3.8 Multiline TC IOC (23V86/96) Controls

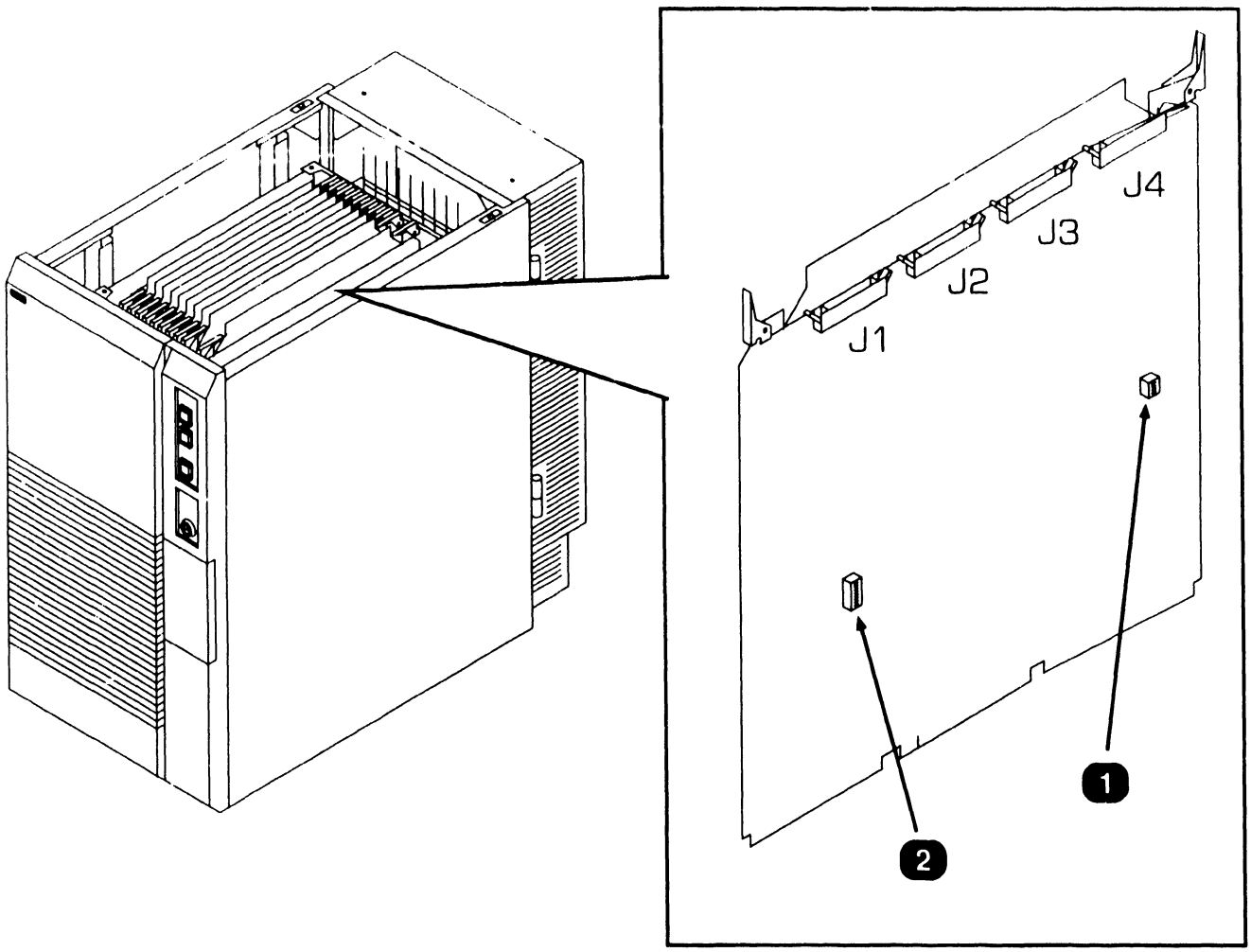

Item	*Name*	*Type and Function*
1	Diagnostic Switch L202	Rocker-type 4-bit switch bank; selects various diagnostic tests when used in conjunction with the I/O Built-In-Test Monitor. (➡6.3.6, 7.2.18)
2	Diagnostic Port Select Switch L220	Rocker-type 8-bit switch bank; selects single channel mode of diagnostic testing and burn-in mode. (➡6.3.6, 7.2.18)

● END

3.3.9 Optional 6550 Gate Array Assembly Controls

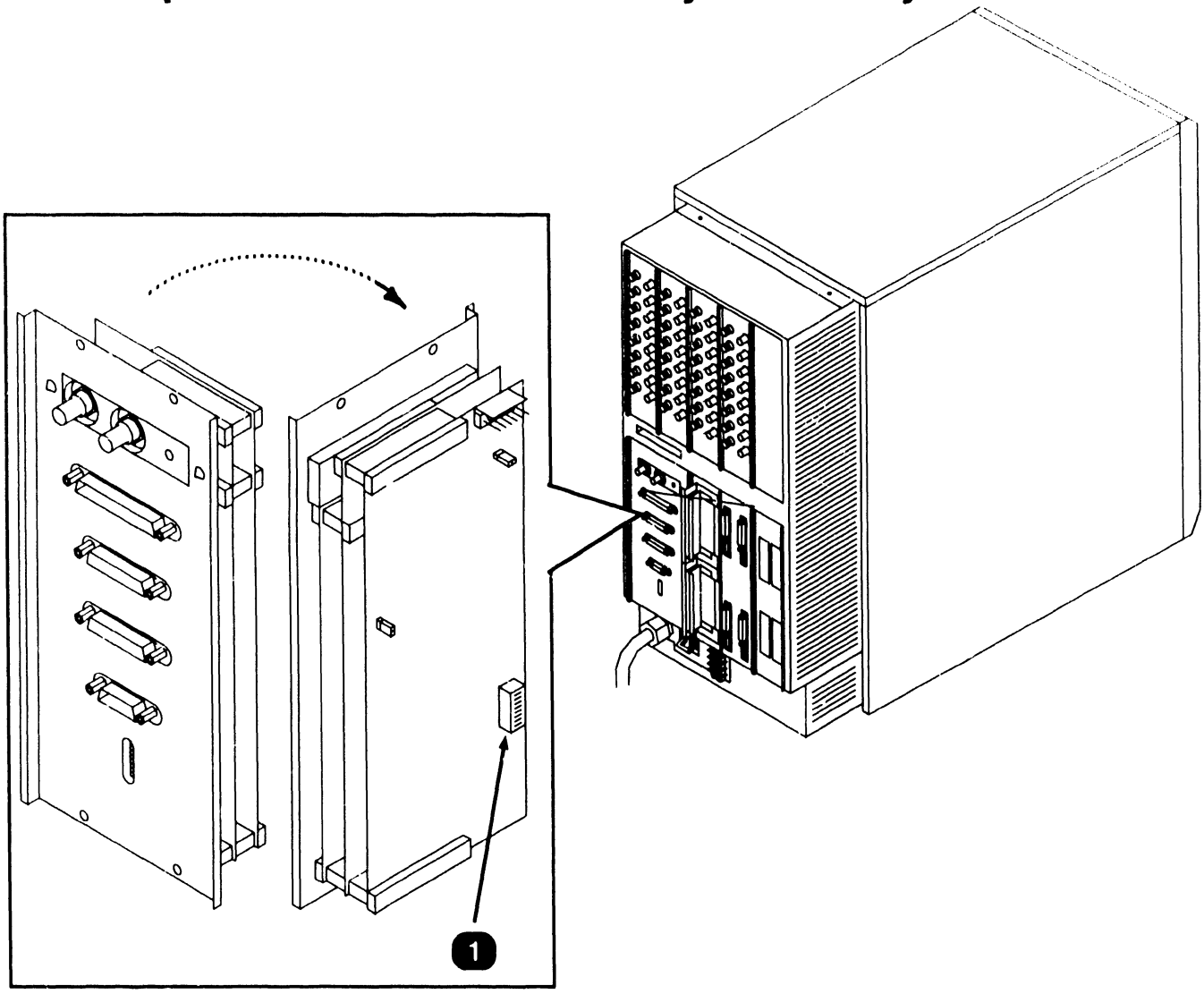

Item	*Name*	*Type and Function*
1	Diagnostic/X.21 Select Switch SW1	Rocker-type 8-bit switch bank; selects interface being used for diagnostic loopback testing and X.21 support. (➡6.3.7, 7.2.29)

● END

3.4.1 Power Controller Board Indicators (Sheet 1 of 2)

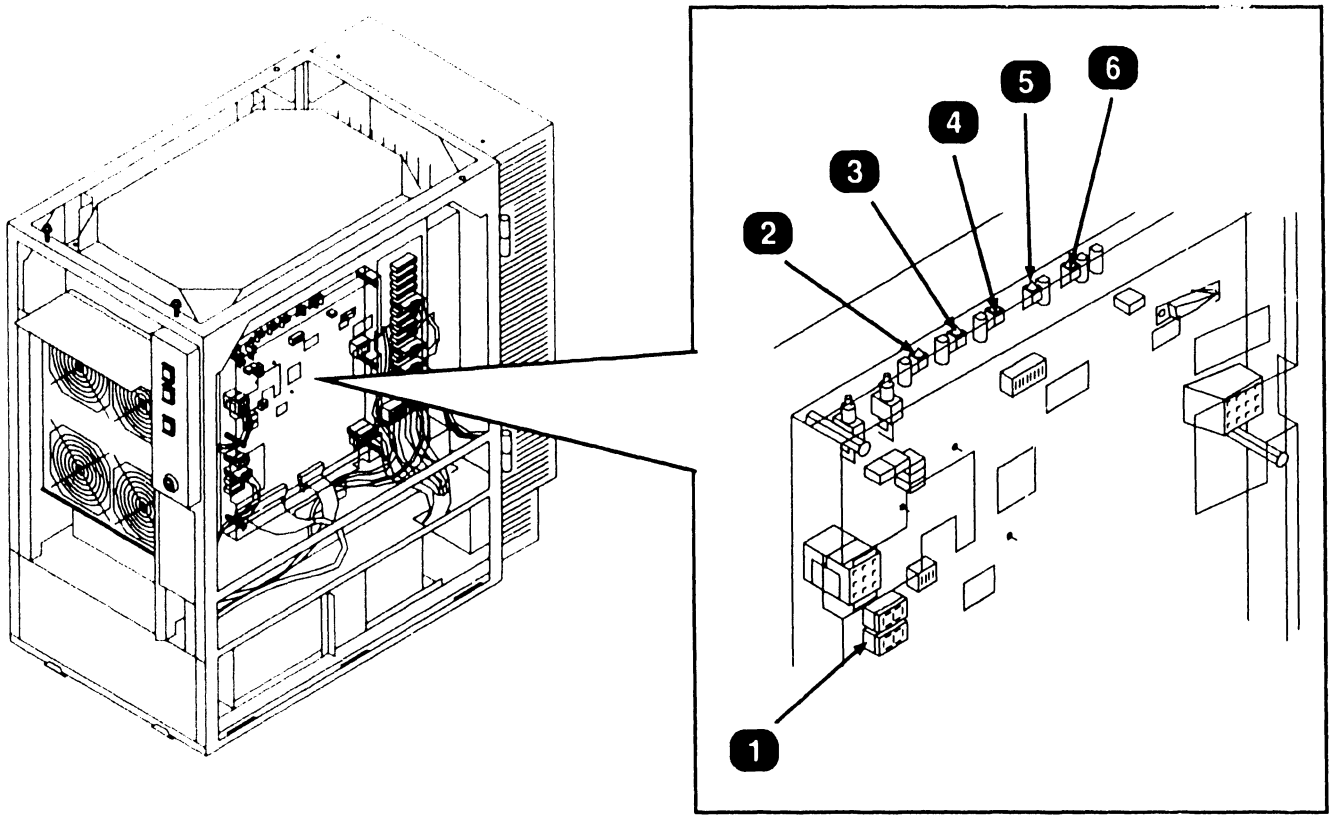

Item	*Name*	*Type and Function*
1	A/D Displays L3, L4	LED; hex displays, used to zero A/D converters. (➡8.2.2)
2	LED1	LED; amber, indicates +5AV is sensed.
3	LED2	LED; amber, indicates +5BV is sensed. (+5BV is not used on VS-7010)
4	LED3	LED; amber, indicates +12V is sensed.
5	LED4	LED; amber, indicates -12V is sensed.
6	LED5	LED; amber, indicates -5V is sensed.

➡NEXT

3.4.1 Power Controller Board Indicators (Sheet 2 of 2)

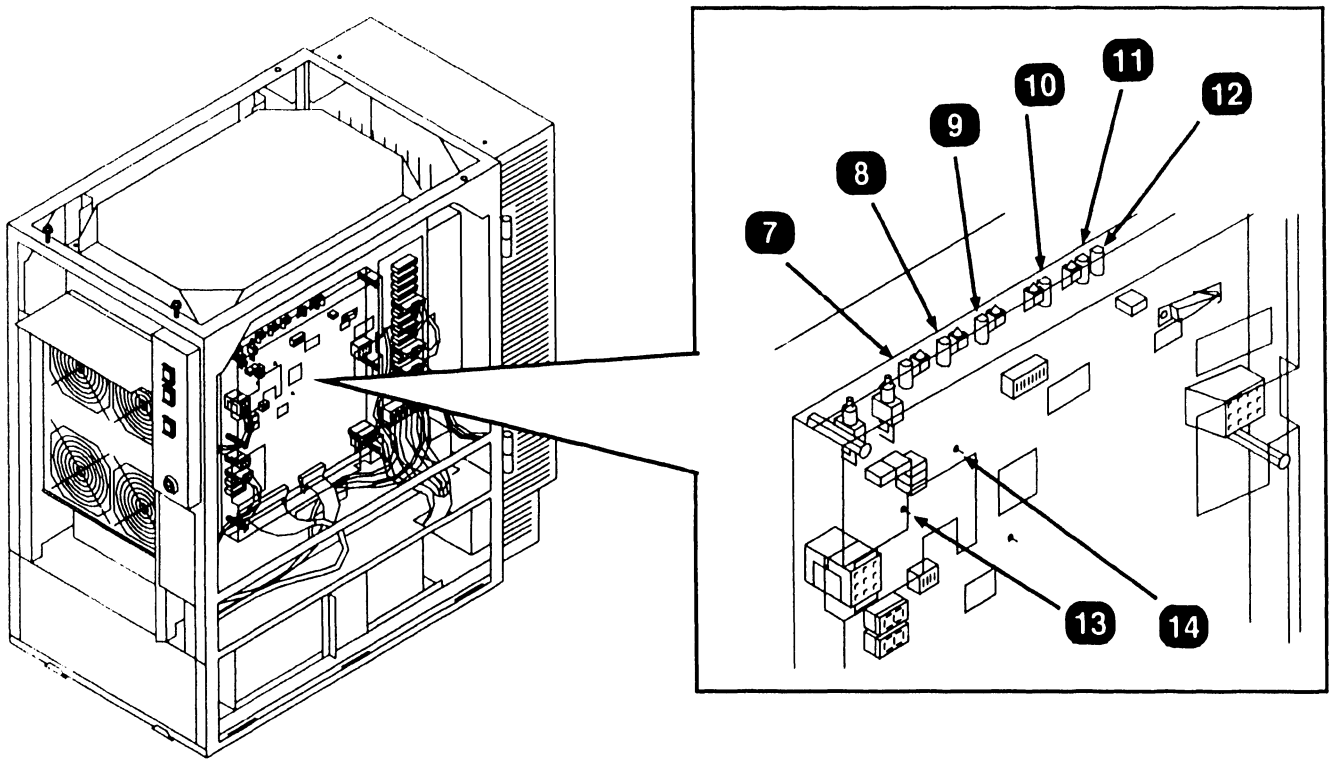

Item	*Name*	*Type and Function*
7	TP+5AV	Terminal, test point for +5AV. (➡8.2.1)
8	TP+5BV	Terminal, test point for checking +5BV. (Not used by VS-7010)
9	TP+12V	Terminal, test point for +12V. (➡8.2.1)
10	TP-12V	Terminal, test point for -12V. (➡8.2.1)
11	TP-5V	Terminal, test point for -5V. (➡8.2.1)
12	TP Ground	Terminal, test point for ±0V. (➡8.2.1)
13	TP2	Terminal, test point for 2.5 volts A/D calibration voltage. (➡8.2.2)
14	TP8	Terminal, test point for 8.0 volts A/D calibration voltage. (➡8.2.2)

● END

SECTION 4 OPERATION

SECTION 4 CONTENTS

SECTION 4

OPERATION

Page

4.1 POWER-UP AND B.I.T. DIAGNOSTIC PROCEDURE 4-1

4.2 POWER-DOWN PROCEDURE 4-15

4.1 Power-Up and B.I.T. Diagnostic Procedure (sheet 1 of 14)

CAUTION

Improper power-on procedure may damage disk and tape drives Volume Table Of Contents (VTOC). Perform power-on procedures as follows:

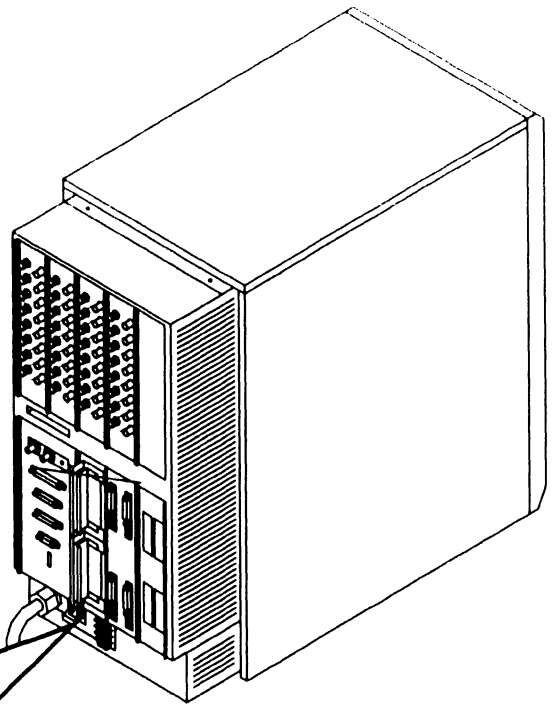

1. Power-on all workstations and printers.
2. Position all external drives ac On/Off circuit breakers to the On position.
3. Position mainframe ac On/Off circuit breaker to the On position.

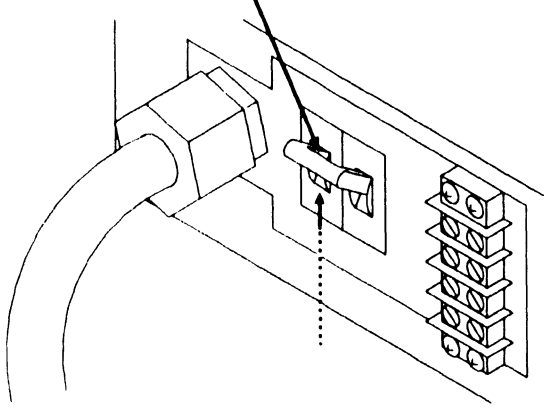

➡NEXT

4.1 Power-Up and B.I.T. Diagnostic Procedure (sheet 2 of 14)

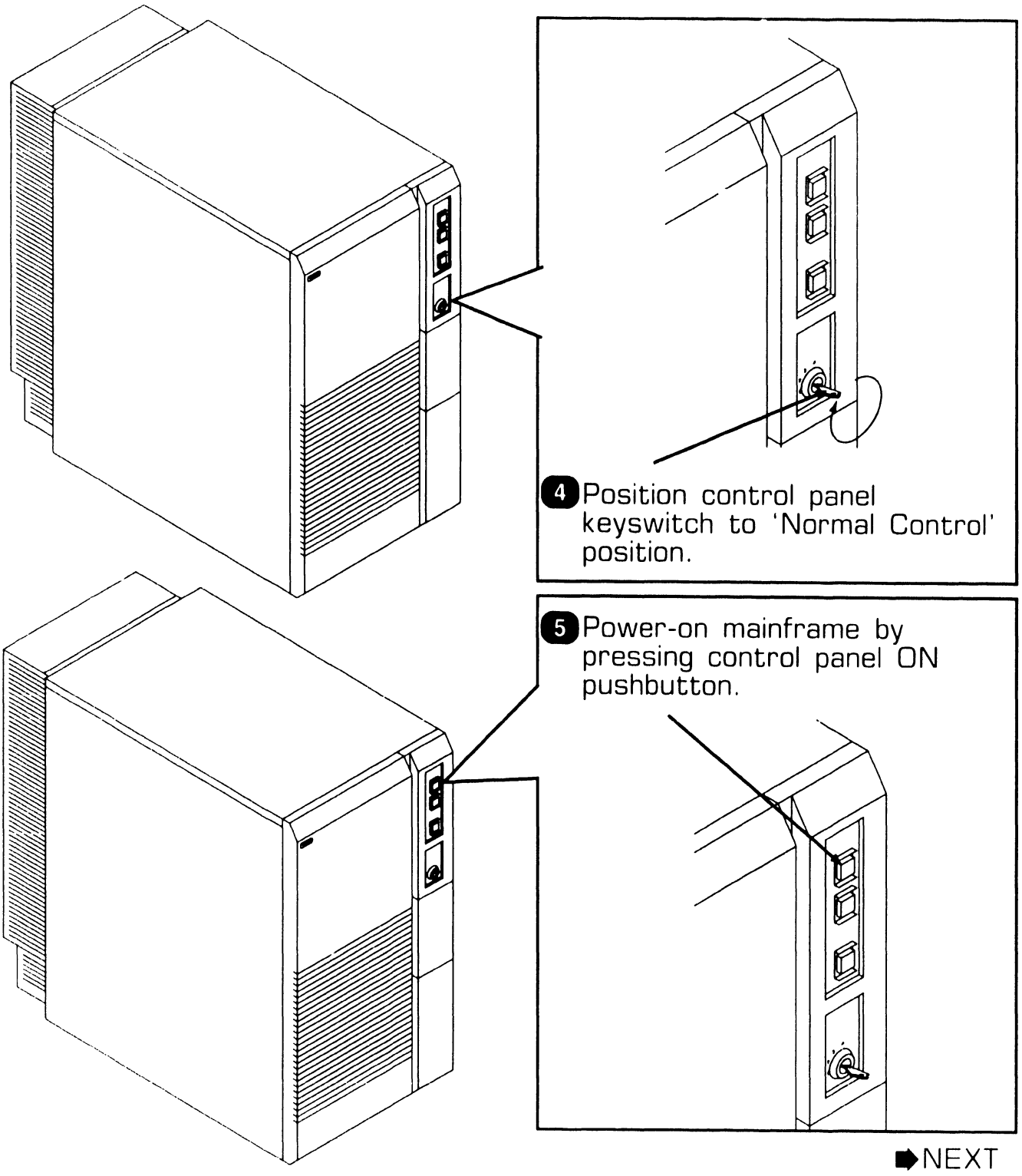

➡NEXT

4.1 Power-Up and B.I.T. Diagnostic Procedure (sheet 3 of 14)

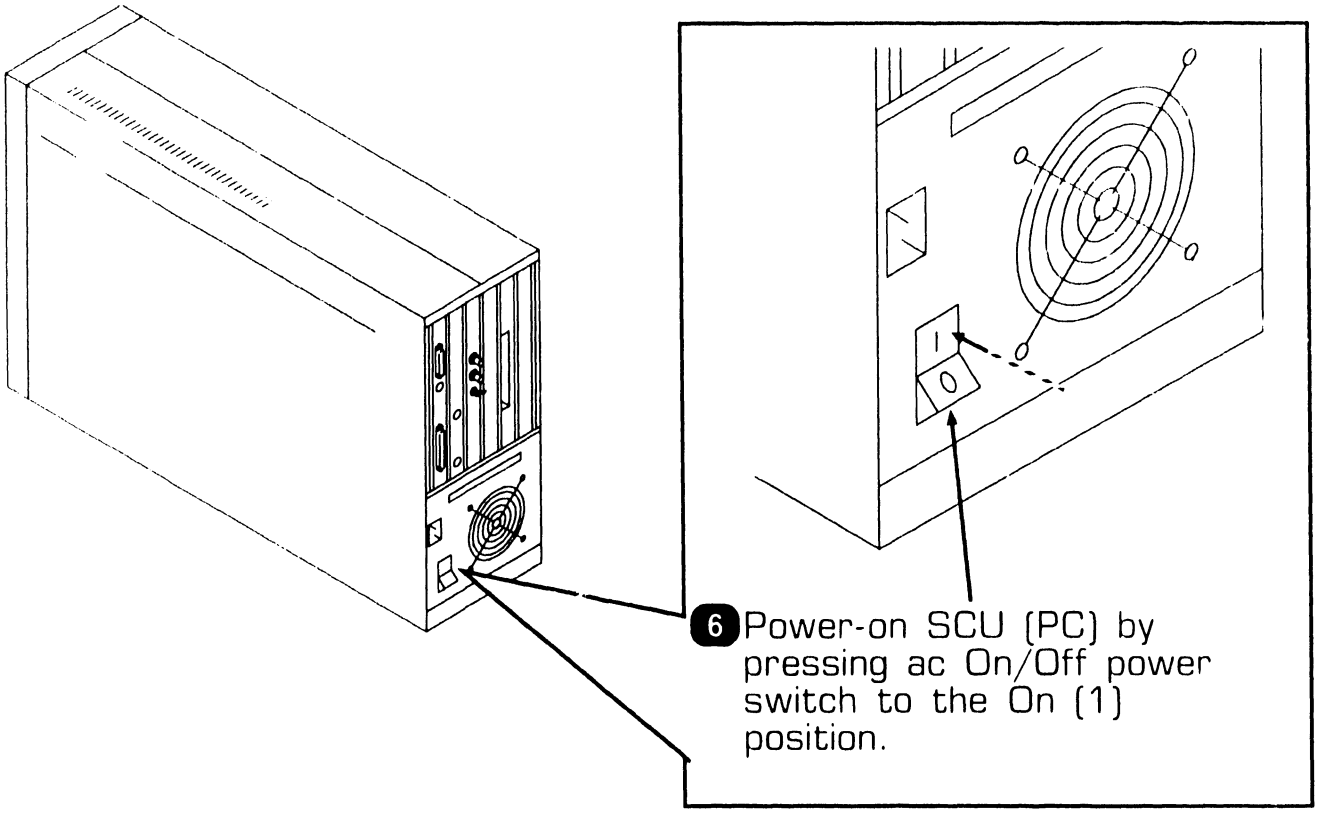

6 Power-on SCU (PC) by pressing ac On/Off power switch to the On (1) position.

7 READY' external disk drives.

➡NEXT

4.1 Power-Up and B.I.T. Diagnostic Procedure (sheet 4 of 14)

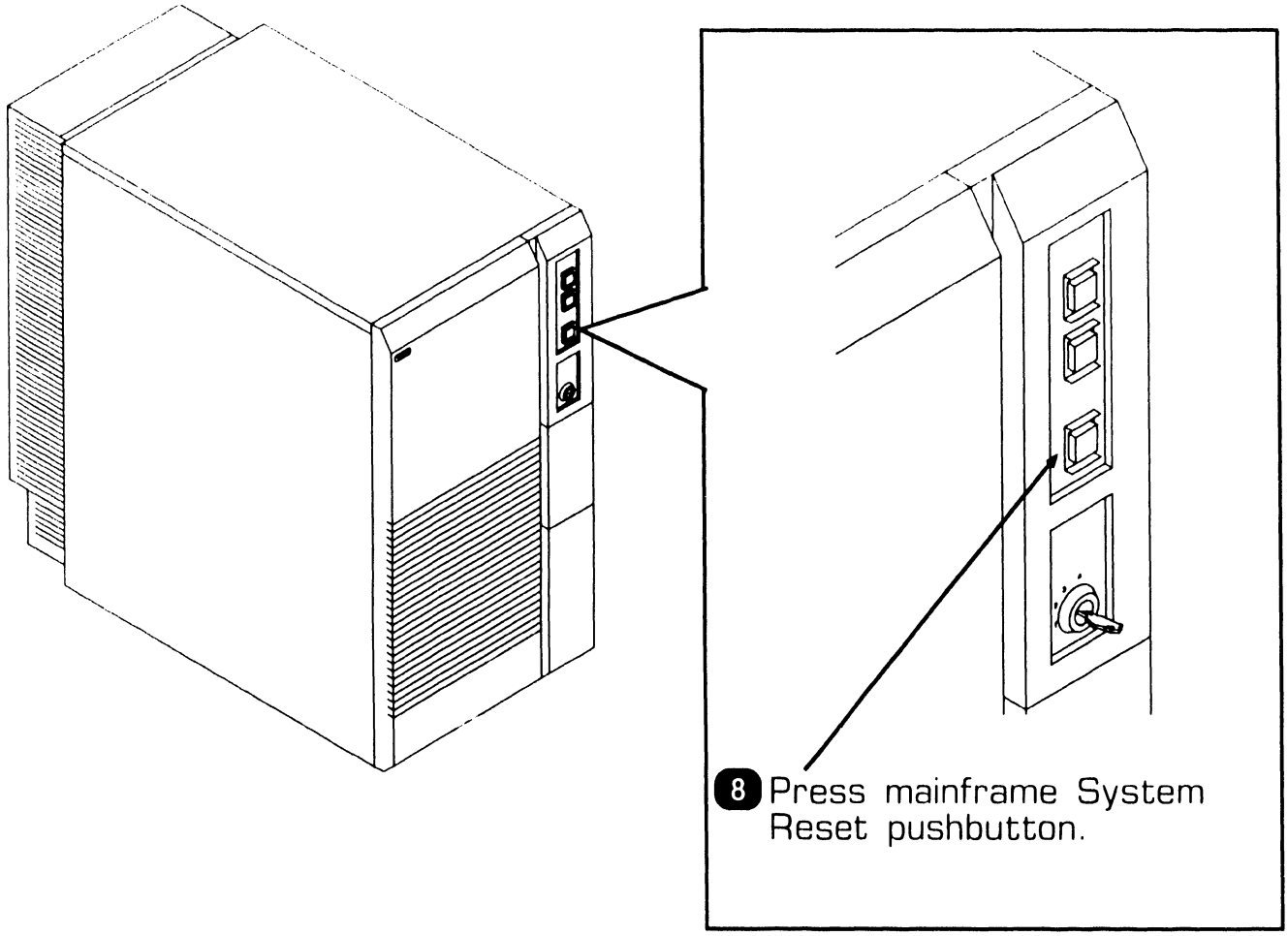

8 Press mainframe System Reset pushbutton.

9 The SCU Start-Up screen is invoked and the following Start-Up message is displayed on the SCU screen.

WANG SUPPORT CONTROL UNIT REV. x.x.x
01 Start From Winchester

➡NEXT

4.1 Power-Up and B.I.T. Diagnostic Procedure (sheet 5 of 14)

10 In a few seconds, the following is displayed on the SCU screen.

Wang Support Control Unit - BIOS x.x.x
MS-DOS Version x.x.x

WANG

System Console

Copyright Wang Laboratories, Inc., 1987

➡NEXT

4.1 Power-Up and B.I.T. Diagnostic Procedure (sheet 6 of 14)

11 The Console Processor Menu screen is then displayed.

NOTE

High-Lighted functions are functions allowed by the selected keyswitch position.

```
                    System in Control Mode

                 * * * Wang VS System Console * * *

SYSCON version x.x.x      11:03 AM      Monday, October 5, 1987

          Press (HELP) for online system console information.

             Use the function keys to select a command.

(1)  ENTER Workstation Emulation          (8)  Easy IPL and Dump
(2)  ENTER Control Mode                   (9)  Display Slot Contents

(5)  AUTO IPL                             (12)  Set Console Defaults
(6)  RSAF Functions                       (13)  Set Time and Date
```

NOTE

System IPL can be accomplished in three ways: PF5 (AUTO IPL), PF8 (Easy IPL and Dump), and PF2 (Enter CP Control) (➡9.7.2). The following IPL sequence is performed using PF5 (Auto IPL).

➡NEXT

4.1 Power-Up and B.I.T. Diagnostic Procedure (sheet 7 of 14)

12 Press PF5 (AUTO IPL). The following message is displayed.

WARNING!! This function resets the system, RETURN to proceed or PF16 to abort''

13 Press 'RETURN'. The Workstation Initialization screen is displayed.

NOTE

If console defaults are incorrect or if CPU code has not been loaded, a CPU error or IPL Error will be displayed (➡6.5.3). Select 'Set Console Defaults (PF12)' from the VS System Console Default screen to correct defaults and to load system microcode (➡9.7.1).

Wang
VS
Workstation Emulation
Version x.xx

Initialization in Progress - Please Wait

➡NEXT

4.1 Power-Up and B.I.T. Diagnostic Procedure (sheet 8 of 14)

14 Within a few seconds, the SYSGEN Configuration screen is displayed.

NOTE

If a configuration file has not been created, the system should be IPL'd as one workstation and one disk (PF1 key) to allow system configuration file creation using GENEDIT (➡9.7.3). Default values @CONFIG@ and @SYSTEM@ are used for configuration file and system library, respectively.

```
* * * MESSAGE M001 BY SYSGEN

INFORMATION REQUIRED BY PROGRAM @SYSGEN@
Active Subprogram is @SYSGEN@
Copyright, Wang Laboratories, Inc. 1985
Specify the name of the system configuration file and press (ENTER)
-or-
Press (1) to use one workstation and one disk.

SYSFILE = @CONFIG@
SYSLIB  = @SYSTEM@

Specify the communications configuration file to be used, if any

COMMFILE =
COMMLIB  = @SYSTEM@

Inhibit logons at all workstations?   LOGONS = NO
Load Microcode to all Devices?        LMCODE = NO
Inhibit Dumping Continuable Halts?    CNDUMP = NO

                                        ➡NEXT
```

4.1 Power-Up and B.I.T. Diagnostic Procedure (sheet 9 of 14)

15 The SYSGEN screen displays the name of the configuration file last used (SYSFILE Field). Enter a valid configuration file name in the field 'SYSFILE'. If the system is using communications, specify the communications configuration file name and library.

16 Respond to prompts as follows:

'Inhibit Logons at all workstations? Logons = NO☐': This prompt offers the option to inhibit logon operations for all workstations. If YES is answered, all workstations except SCU (PC) will be inhibited from logon operations. Default value is NO.

'Load Microcode to all Devices? LMCODE = NO☐': This prompt allows optional loading of microcode to all devices on the system with loadable microcode, including remote workstations. (Note that most devices load microcode when the device is first powered-off). If YES is selected, the system loads microcode to all microcode loadable devices, thus slowing down the IPL process significantly. Default value is NO.

'Inhibit Dumping Continuable Halts? CNDUMP = NO☐': This prompt enables or disables continuable dumps. If YES is selected, the system does not run continuable dumps, the error remains and system operation may be affected. Default value is NO.

➡NEXT

4.1 Power-Up and B.I.T. Diagnostic Procedure (sheet 10 of 14)

17 Press 'RETURN'. The Initial Program Load (IPL) screen is displayed.

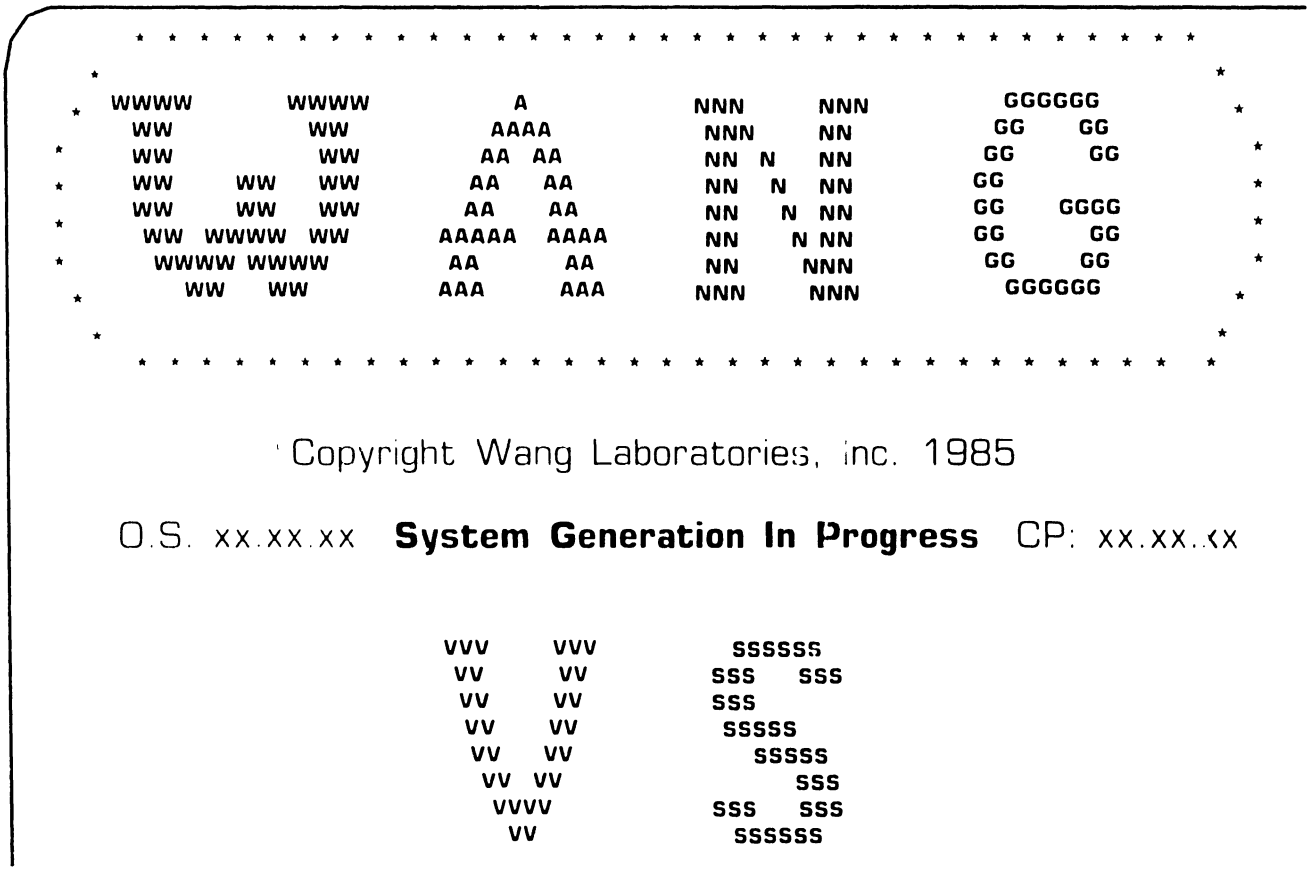
WWWW WW WW W

4.1 Power-Up and B.I.T. Diagnostic Procedure (sheet 11 of 14)

19 Once system generation has completed successfully, the following message is displayed.

I/O Subsystem Load in Progress

NOTE

The Date and Time screen will only appear if the SCU real time clock data is not useable or if N(o) is selected from the VS System Console Defaults menu (➡9.7.2).

20 In about one minute, the Time and Date screen is displayed.

```
* * * MESSAGE WN3 BY IPL

      INFORMATION REQUIRED BY PROGRAM @SYSGEN@

SET DATE AND TIME

YEAR = YY          MONTH = MM          DAY    = DD
HOUR = HH          MINUTE= MM          SECOND = SS

Memory Size = 08192 K
```

21 Enter the date in the YY/MM/DD format. Enter the current time using the 24-hour clock format and press ENTER.

➡NEXT

4.1 Power-Up and B.I.T. Diagnostic Procedure (sheet 12 of 14)

22 The following message is displayed.

System Initialization In Progress

23 When system initialization is completed successfully (approximately one minute), the Operator's Console screen is displayed.

```
                * * * Wang VS Operator's Console * * *
        10:12          Friday          October 30, 1987

Position to (*) and Press (ENTER) to Provide Immediate Operator Service:

*MSG from QVR: Queue Verification Routine Complete . . . . . . .  10:12

                Press (1) to Return to User Mode
                              -or-
                Use the Function Keys to Manage:

    2) PRINT Queue                    9) PRINTERs
    3) PROCEDURE Queue               10) DISKs
    4) TRANSMIT Queue                11) TAPEs
    5) RETRIEVE Queue                12) TELECOMMUNICATIONs
                                     13) WORKSTATIONs
    6) INTERACTIVE Tasks
    7) NON-INTERACTIVE Tasks         14) SYSTEM Options

  Press (HELP) at Any Time to Return to the Operator Console Menu
```

24 When the message 'Queue Verification Routine Complete' appears (20 to 30 seconds), acknowledge the message by positioning the cursor next to the message and press RETURN.

➡NEXT

4.1 Power-Up and B.I.T. Diagnostic Procedure (sheet 13 of 14)

25 Press PF1 to enter user mode. The VS Logon screen is displayed.

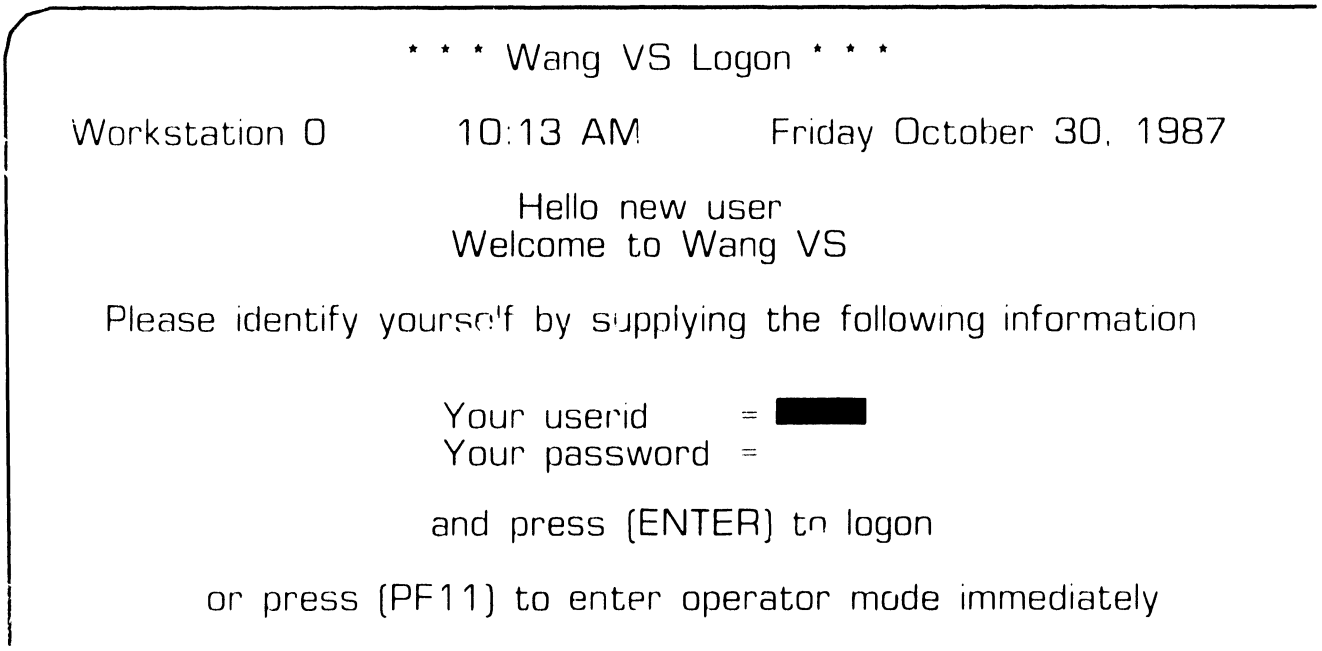

26 Enter the default three-letter user ID, CSG. No password is required. Press ENTER.

➧NEXT

4.1 Power-Up and B.I.T. Diagnostic Procedure (sheet 14 of 14)

27 The Command Processor screen is now displayed and the system is in user mode. This screen denotes the system has powered-up successfully.

```
* * * WANG VS COMMAND PROCESSOR * * *
Copyright, Wang Laboratories, Inc. 1985
Workstation 0 Ready   10:15 AM      Friday October 30, 1987

Hello
Welcome to the Wang VS

Press (HELP) at any time to interrupt your program or to stop
processing of current command.

Use function keys to select a command:

(1) RUN Program or Procedure
(2) Set USAGE Constraints
(3) Show PROGRAM Completion Report

(4) Manage QUEUES
(5) Manage FILES/Libraries
(6) Manage DEVICES

(11) Enter OPERATOR Mode
(12) Submit PROCEDURE

(13) Send MESSAGE to Operator
(15) PRINT Command Screen
(16) LOGOFF
```

● END

4.2 Power-Down Procedure (sheet 1 of 5)

CAUTION

Powering down of system and/or any external disk or tape drive improperly may result in damage to Volume Table Of Contents (VTOC).

1. From Operators Console menu, press PF13 to verify all users have logged off system.
2. From Operators Console menu, press PF7 (Non-interactive Tasks) to check background tasks on system. Identify any user running a background task and advise user to suspend or terminate.
3. From Operators Console menu, press PF9 (Printers) and idle all printers.
4. Log off from the SCU.
5. Exit workstation emulation by pressing keyboard keys 'CONTROL', then 'SHIFT' and 'CANCEL' simultaneously. The Workstation Emulation menu is displayed.

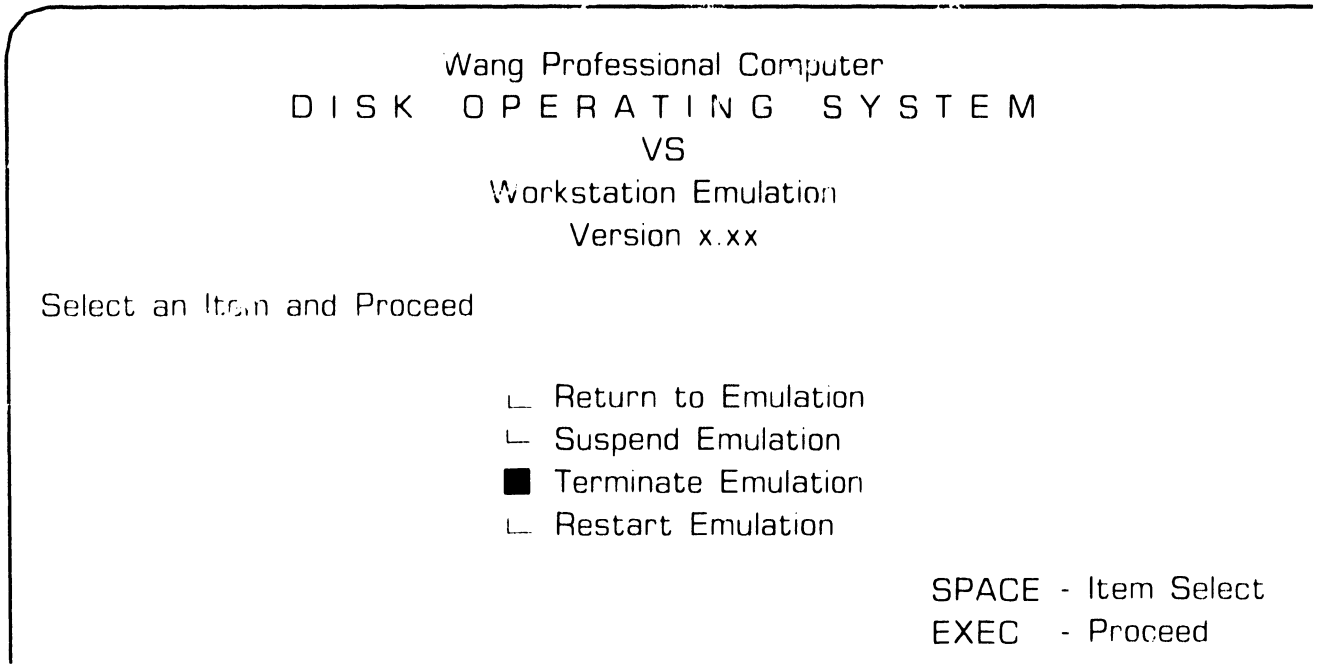

4.2 Power-Down Procedure (sheet 2 of 5)

6. Select 'Terminate Emulation' and press EXECUTE. The Console Processor screen is displayed.

```
                    System in Control Mode

                 * * * Wang VS System Console * * *

SYSCON version x.x.x      11:03      Monday, October 5, 1987

          Press (HELP) for online system console information.

          Use the function keys to select a command.

(1) ENTER Workstation Emulation        (8) Easy IPL and Dump
(2) ENTER Control Mode                 (9) Display Slot Contents

(5) AUTO IPL                           (12) Set Console Defaults
(6) RSAF Functions                     (13) Set Time and Date
```

7. Press PF2, Enter Control Mode. The VS Central Processor Control screen is displayed.

```
                    VS Central Processor Control

Select a PF Key to perform the indicated function
CPID   | Current Status
-------------------------------------------------------
0      | Running
-------------------------------------------------------

(1) CP(0) Control Mode                 (8) Reset System
                                       (10) Load CP Code

                                       (16) Exit
```

➡NEXT

4.2 Power-Down Procedure (sheet 3 of 5)

8 Press PF8 (Reset System) or control panel 'RESET' pushbutton. Then press PF1 (CP (0) Control Mode). The VS Central Processor Control screen current status field changes as follows:

VS Central Processor Control

Select a PF Key to perform the indicated function

CPID	Current Status
0	Control Mode (IPL) Requested)

(1) CP(0) Control Mode

(8) Reset System
(10) Load CP Code

(16) Exit

9 The mainframe is now in Control Mode. Power down all workstations.

10 Unready' external disk drives. Allow drive heads to retract.

11 Unload tape drives (if any).

➡NEXT

4.2 Power-Down Procedure (sheet 4 of 5)

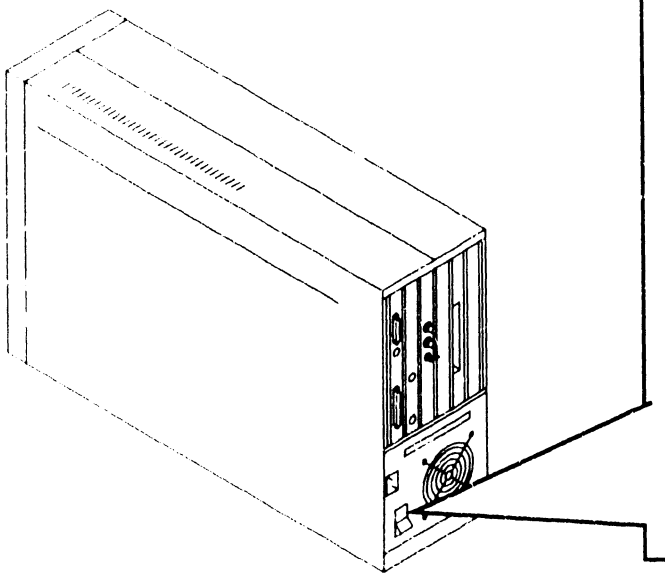

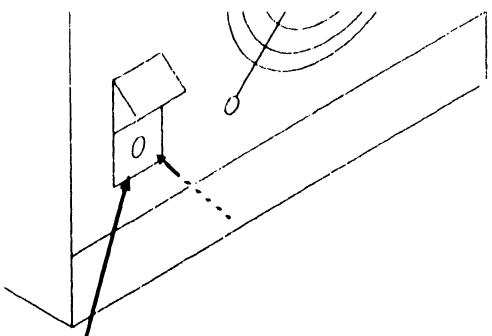

12 Power-down SCU by positioning the ac On/Off switch to the Off position.

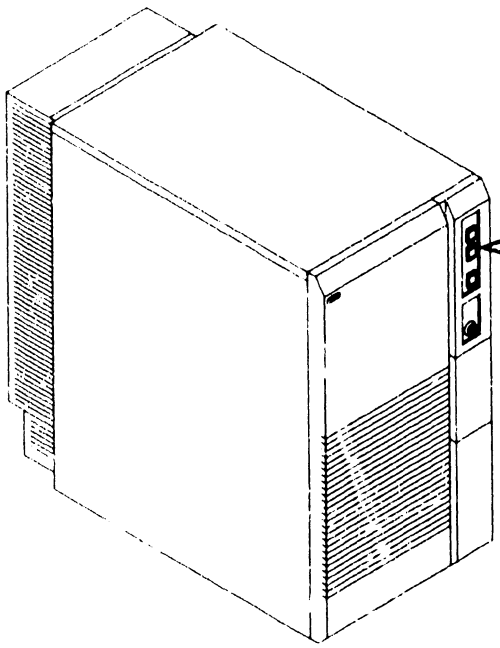

13 Power-down mainframe by pressing power Off (red) pushbutton.

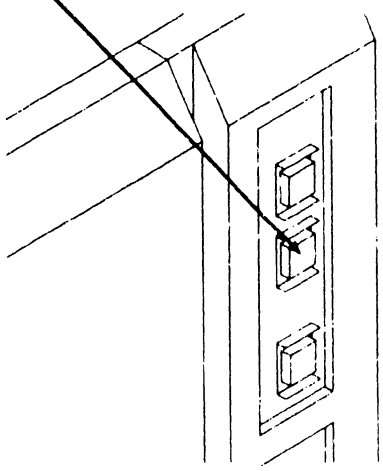

NEXT

4.2 Power-Down Procedure (sheet 5 of 5)

14 Position mainframe ac On/Off circuit breaker to the Off position.

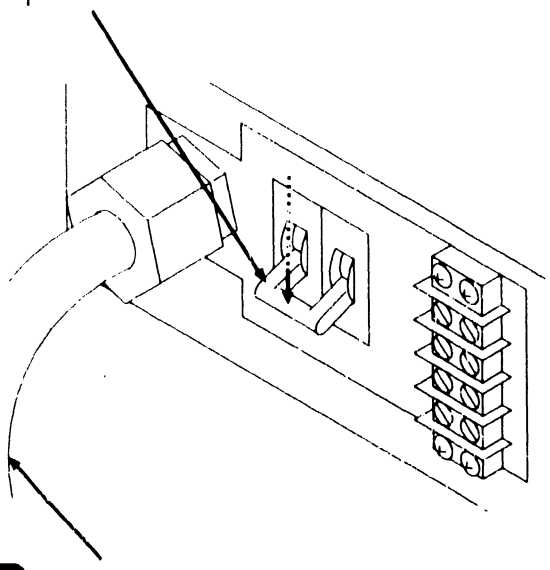

15 Remove mainframe ac power cord from ac power receptacle.

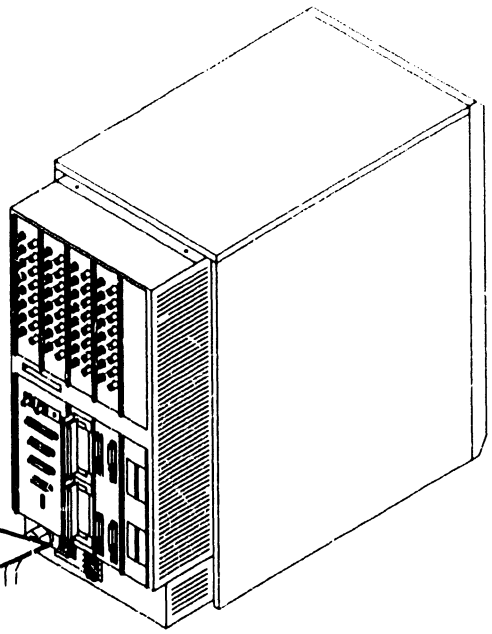

● END

SECTION 7
REPAIR

SECTION 7 CONTENTS

SECTION 7

REPAIR

Page

7.1 TOOLS AND TEST EQUIPMENT 7-1

7.2 MAINFRAME REMOVAL PROCEDURES 7-2
7.2.1 Top Cover Removal 7-2
7.2.2 Front Cover Removal 7-3
7.2.3 Side Cover Removal 7-4
7.2.4 Card Cage Cover Removal 7-5
7.2.5 General PCB Removal 7-6
7.2.6 Central Processing Unit (CPU) Removal 7-8
7.2.7 Address Generation Unit (AGU) Removal 7-10
7.2.8 Address Translation Unit (ATU) Removal 7-12
7.2.9 Support Control Unit (SCU) Removal 7-14
7.2.10 Memory Control Unit (MCU) Removal 7-15
7.2.11 Main Memory (MEM) Board (210-8703/-1) Removal 7-17
7.2.12 Main Memory (MEM) Board (210-9874/-1) Removal 7-19
7.2.13 System Bus Interface (SBI) Removal 7-21
7.2.14 SMD IOC (23V98-4) Removal 7-23
7.2.15 Serial IOC (23V67) Removal 7-26
7.2.16 Kennedy Tape (23V95-1) IOC Removal 7-28
7.2.17 Telex Tape (23V95-2) IOC Removal 7-30
7.2.18 Multiline TC (23V86/96) Removal 7-32
7.2.19 Power Supply Controller Board Removal 7-34
7.2.20 DC Power Distribution Unit (DC PDU) Removal 7-37
7.2.21 Front Fan Housing Removal 7-40
7.2.22 Rear Fan Housing Removal 7-43
7.2.23 AC Power Distribution Unit (AC PDU) Removal 7-46
7.2.24 Multioutput Power Supply Removal 7-48
7.2.25 Control Panel Removal 7-53

SECTION 7 CONTENTS

SECTION 7

REPAIR (CONT.)

Page

7.2.26 Lighted Pushbutton Switch Lamp Removal 7-55
7.2.27 Card Cage Removal 7-56
7.2.28 General Rear Door I/O Panael Removal 7-61
7.2.29 6550 Gate Array Assembly Removal 7-63
7.2.30 Multiline TC Panel Removal 7-66
7.2.31 EAPA Panel Removal 7-69
7.2.32 SCU Interface Cable Removal 7-71
7.2.33 DC PDU Power Harness Removal 7-73
7.2.34 Multioutput Power Supply On/Off Cable Removal 7-75
7.2.35 Multioutput Power Supply AC PDU Cable Removal 7-77
7.2.36 Foam Air Filter Removal 7-78
7.2.37 Optional High-Speed SMD IOC (70V98-4A) Removal 7-79

7.3 SCU (PROFESSIONAL COMPUTER) REMOVAL PROCEDURES . 7-82

7.4 SCU (PM-004L) MONITOR REMOVAL PROCEDURES 7-83

7.1 Tools and Test Equipment

No special tools or test equipment are required to repair the VS-7010 Computer system. All necessary repair can be accomplished using the Wang CE tool kit (WLI# 726-9401).

WARNING

THIS COMPUTER EQUIPMENT HAS BEEN VERIFIED AS FCC CLASS A.

IN ORDER TO MAINTAIN COMPLIANCE WITH FCC CLASS A VERIFICATION, THE FOLLOWING CONDITIONS MUST BE ADHERED TO DURING NORMAL OPERATION OF EQUIPMENT.

- ALL COVERS MUST BE ON THE SYSTEM AND SECURED IN THE PROPER MANNER.

- ALL INTERNAL CABLES MUST BE ROUTED IN THE ORIGINAL MANNER WITHIN THE CABLE CLAMPS PROVIDED FOR THAT PURPOSE.

- ALL EXTERNAL CABLES MUST BE SECURED AND THE PROPER CABLE USED TO ENSURE THAT CABLE SHIELDING IS PROPERLY GROUNDED TO THE CABLE CLAMPS PROVIDED.

- ALL HARDWARE IS PROPERLY SECURED.

● END

7.2 Mainframe Removal Procedures

7.2. Top Cover Removal

1. Power off mainframe and disconnect ac power. (➡4.2)

2. Remove two screws from rear of top cover.

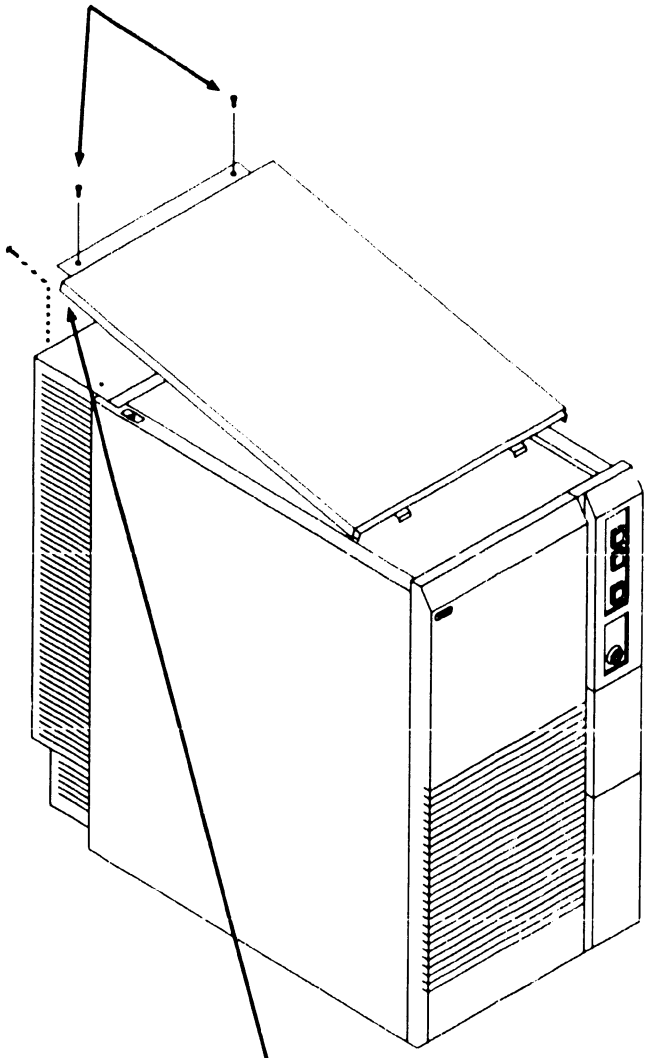

3. Lift rear of top cover up two inches and slide top cover towards the rear of unit and remove.

● END

7.2 Mainframe Removal Procedures

7.2.2 Front Cover Removal

1. Power off mainframe and disconnect ac power. (➡4.2)
2. Remove top cover. (➡7.2.1)
3. Loosen two screws securing front cover to chassis.

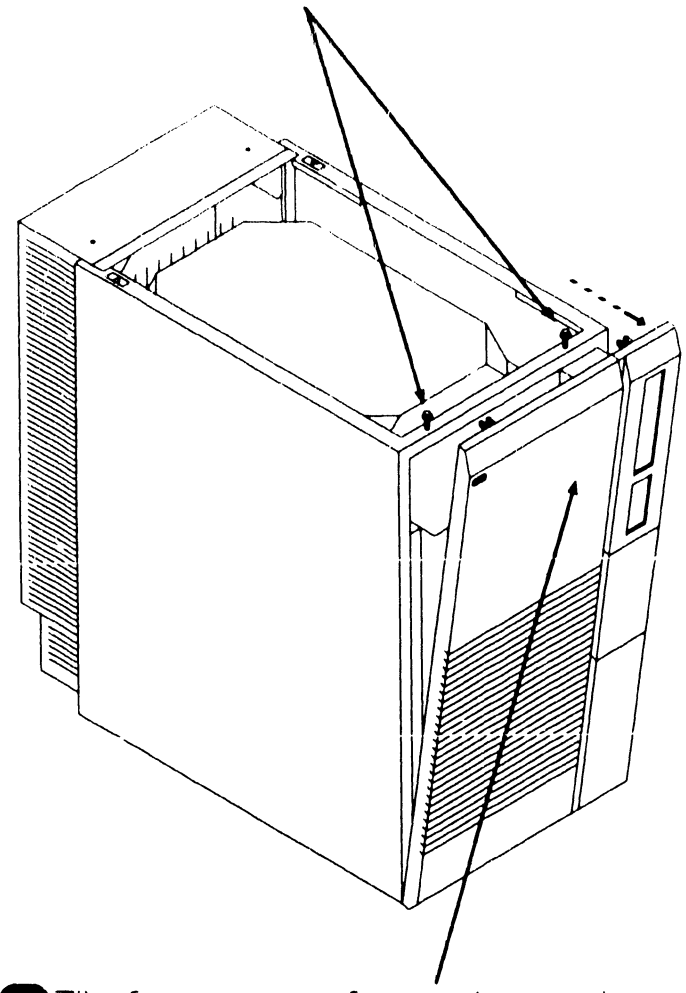

4. Tilt front cover forward enough to clear screws and lift cover off.

● END

7.2 Mainframe Removal Procedures

7.2.3 Side Cover Removal

1. Power off mainframe and disconnect ac power. (➡4.2)
2. Remove top cover. (➡7.2.1)
3. Remove front cover. (➡7.2.2)

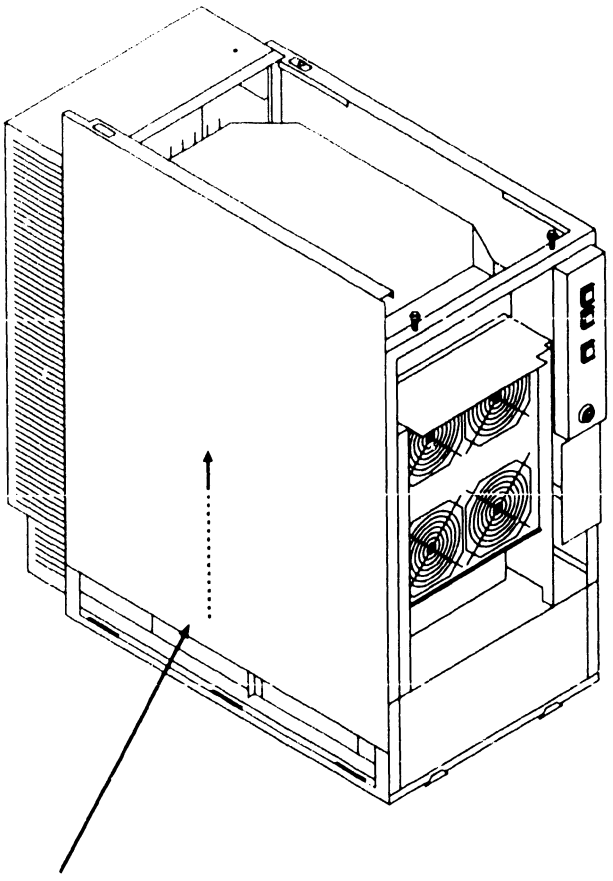

4. Lift side covers upward two inches to disengage cover tabs and remove.

● END

7.2 Mainframe Removal Procedures

7.2.4 Card Cage Cover Removal

1. Power off mainframe and disconnect ac power. (➡4.2)
2. Remove top cover. (➡7.2.1)
3. Remove four screws securing card cage cover to card cage.

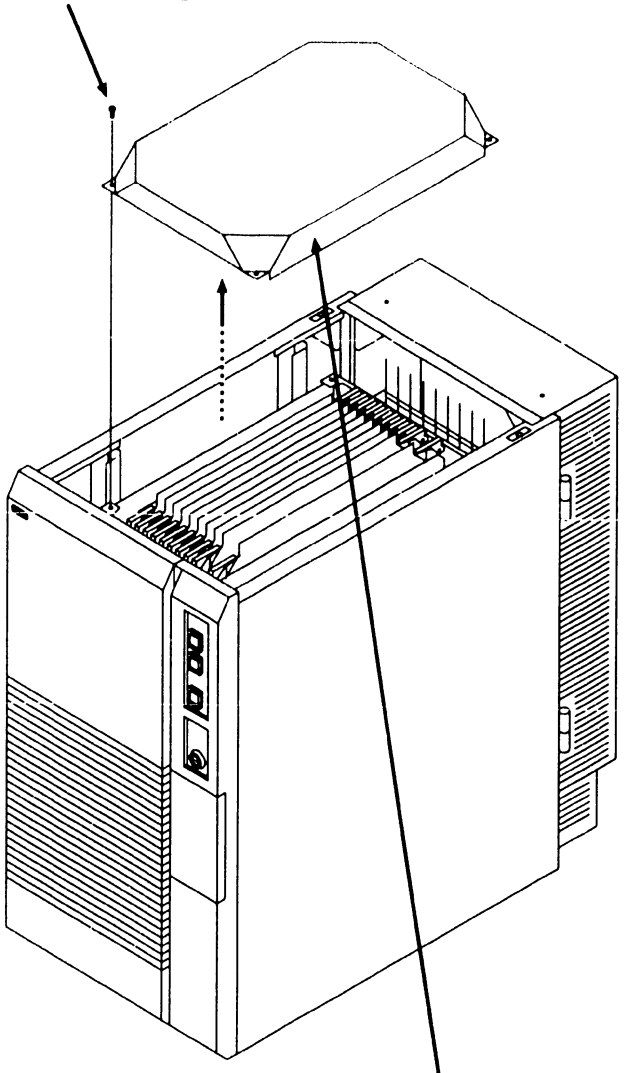

4. Remove card cage cover.

● END

7.2 Mainframe Removal Procedures

7.2.5 General PCB Removal (Sheet 1 of 2)

NOTE

General PCB removal procedures are procedures common to all PCBs within the card cage. Procedures specific to PCBs are found under the associated PCB heading. These procedures should be followed when removing PCBs from the card cage.

1. Power off mainframe and disconnect ac power. (➡4.2)
2. Remove top cover. (➡7.2.1)
3. Remove card cage cover. (➡7.2.4)
4. Note cable routing and location and remove cables from PCB connectors.
5. Note PCB location. A board locator label is mounted on the fan shroud assembly. PCBs must be installed in the correct backplane slot.

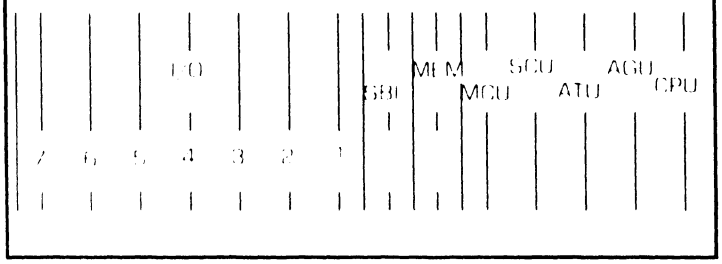

NOTE

Option PCBs SMD Controller IOC and Serial IOC are option slot dependant as follows:

- First SMD must be installed in I/O slot 1.
- First Serial IOC (supporting SCU) must be installed in I/O slot 3.

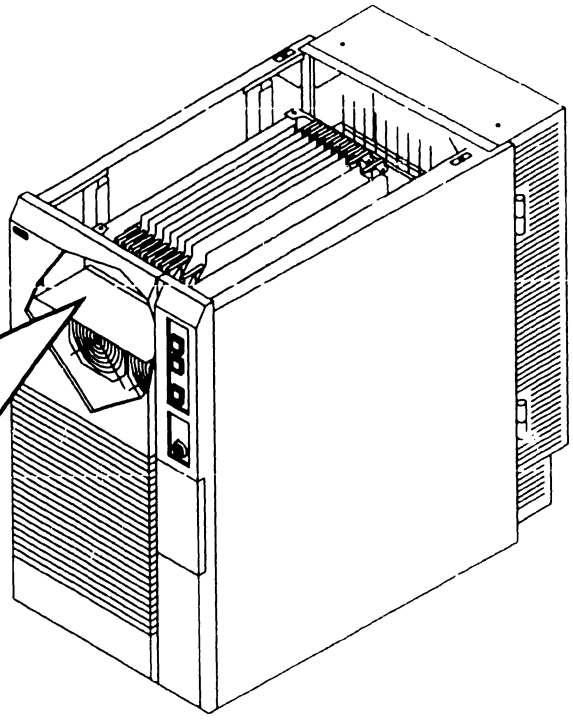

➡NEXT

7.2 Mainframe Removal Procedures

7.2.5 General PCB Removal (Sheet 2 of 2)

CAUTION

Be careful when removing and handling the large flexible VS-7010 boards.

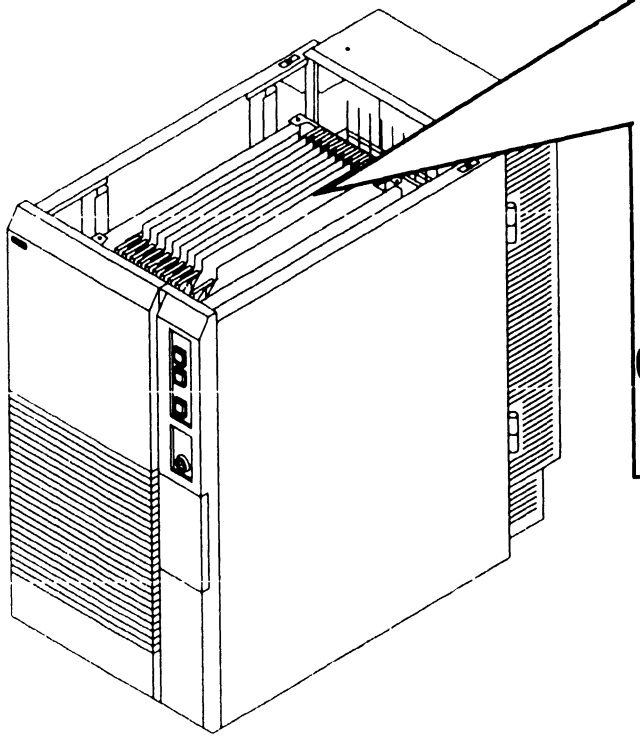

6 Position PCB lever clamps to open position by pulling clamp away from PCB, thus freeing PCB from card cage connectors.

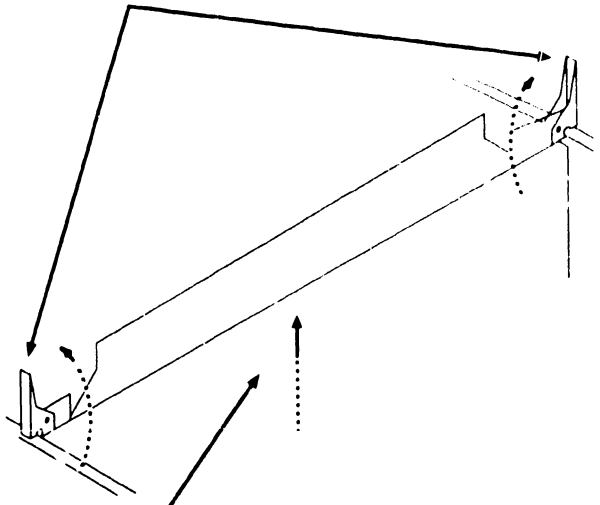

7 Pull PCB out of card cage by sliding on associated card cage guides.

● END

7.2 Mainframe Removal Procedures

7.2.6 Central Processing Unit (CPU) Removal (Sheet 1 of 2)

1. Power off mainframe and disconnect ac power. (➡4.2)
2. Remove top cover. (➡7.2.1)
3. Remove card cage cover. (➡7.2.4)
4. Note cable position and remove 50-pin cable from connector J1 (CPU J1 to AGU J1).
5. Remove PCB from backplane. (➡7.2.5)

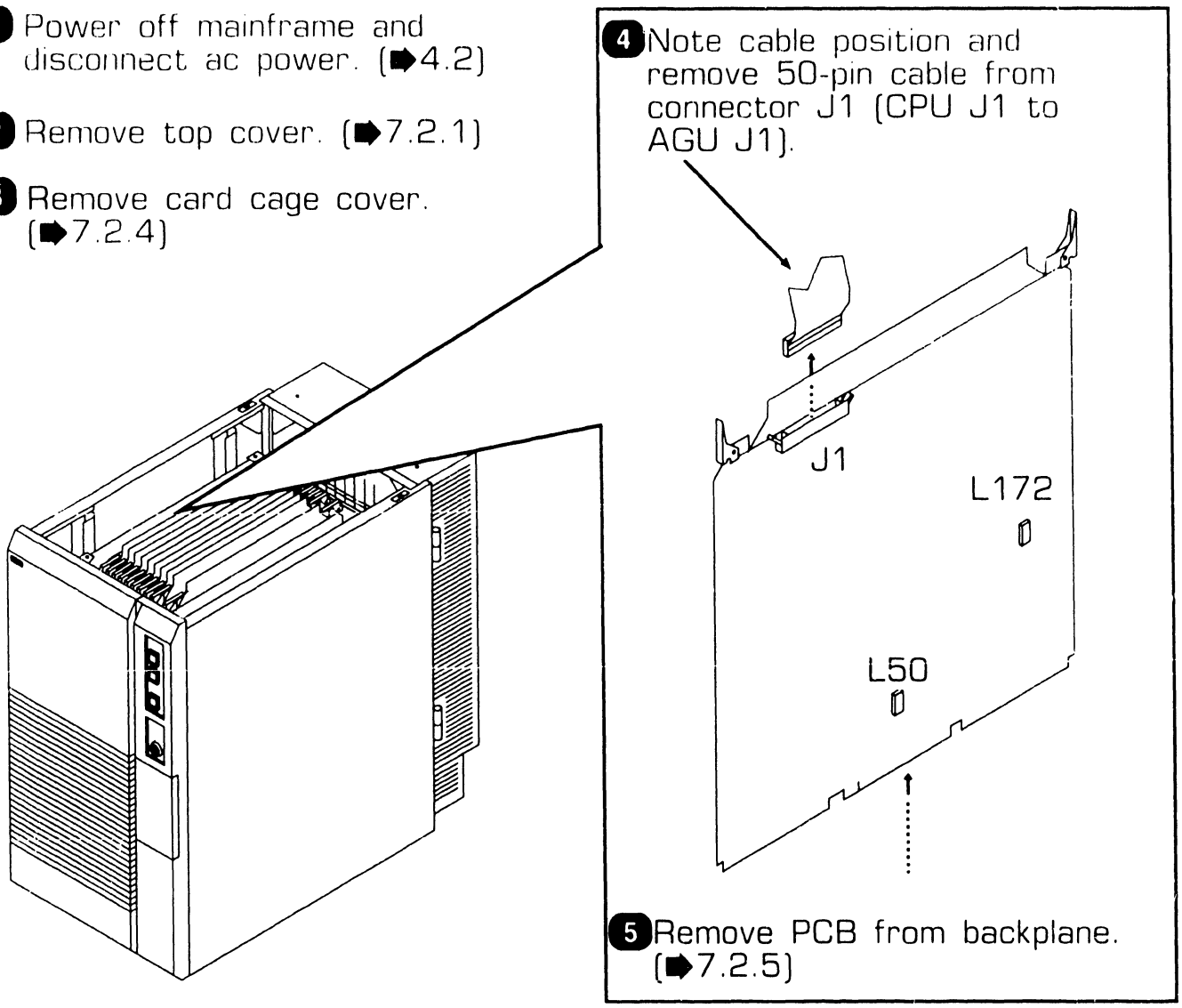

➡NEXT

7.2 Mainframe Removal Procedures

7.2.6 Central Processing Unit (CPU) Removal (Sheet 2 of 2)

6 Verify proper jumper positions of CPU Clock jumpers at location L50.

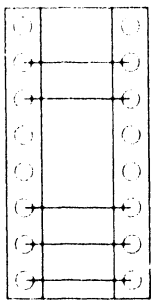

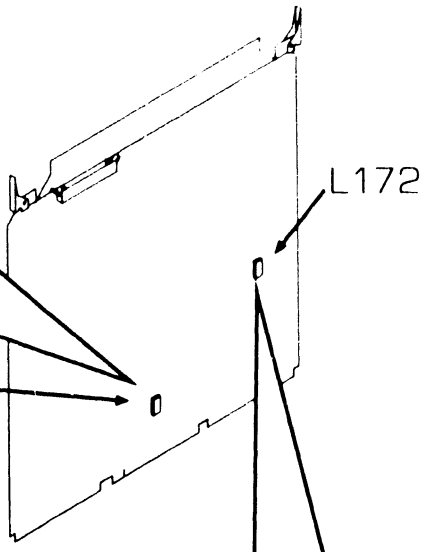

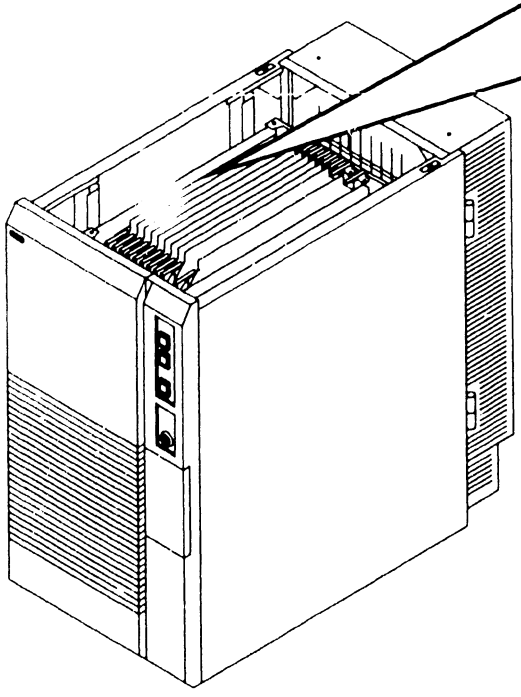

7 Verify proper jumper positions of Support Packet Bus (SPB) Target ID jumpers at location L172.

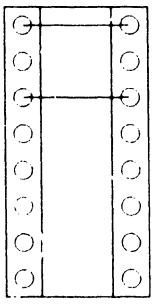

● END

7.2 Mainframe Removal Procedures

7.2.7 Address Generation Unit (AGU) Removal (Sheet 1 of 2)

1. Power off mainframe and disconnect ac power. (➡4.2)
2. Remove top cover. (➡7.2.1)
3. Remove card cage cover. (➡7.2.4)

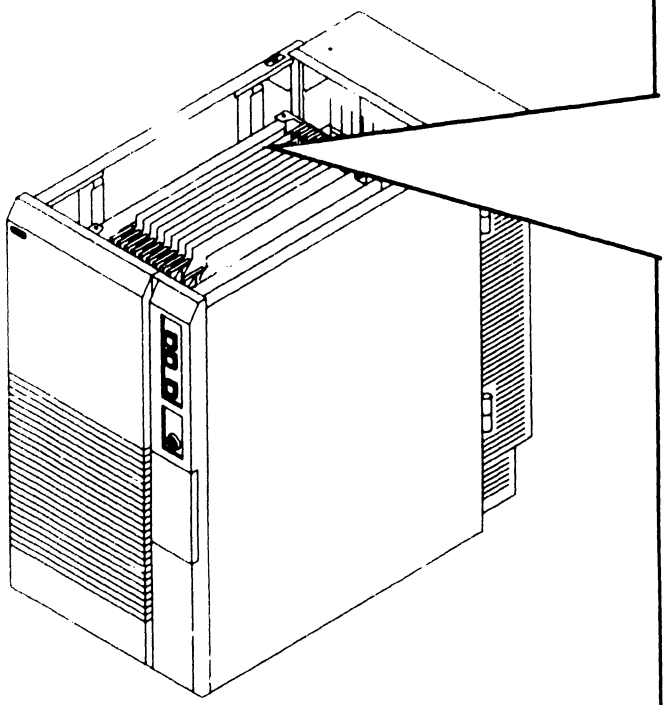

4. Open cable clamp to the right. Note cable position and remove 50-pin cable from connector J1 (AGU J1 to CPU J1) and connector J2 (AGU J2 to ATU J1).

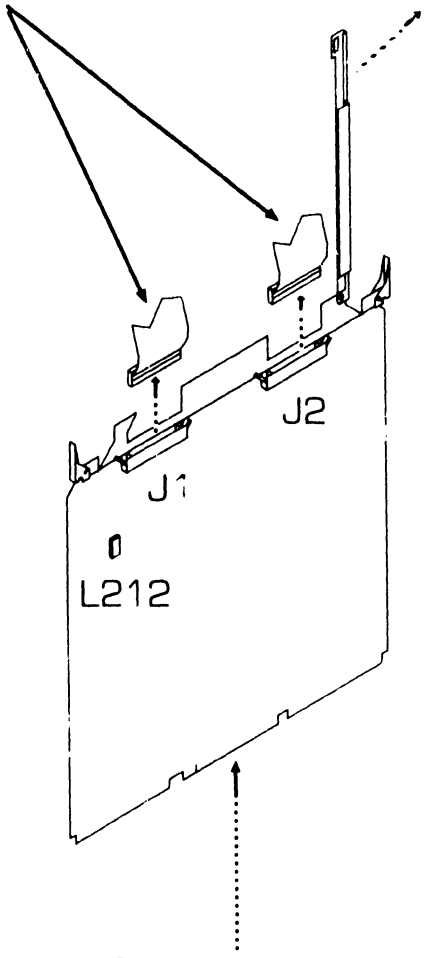

5. Remove PCB from backplane. (➡7.2.5)

➡NEXT

7.2 Mainframe Removal Procedures

7.2.7 Address Generation Unit (AGU) Removal (Sheet 2 of 2)

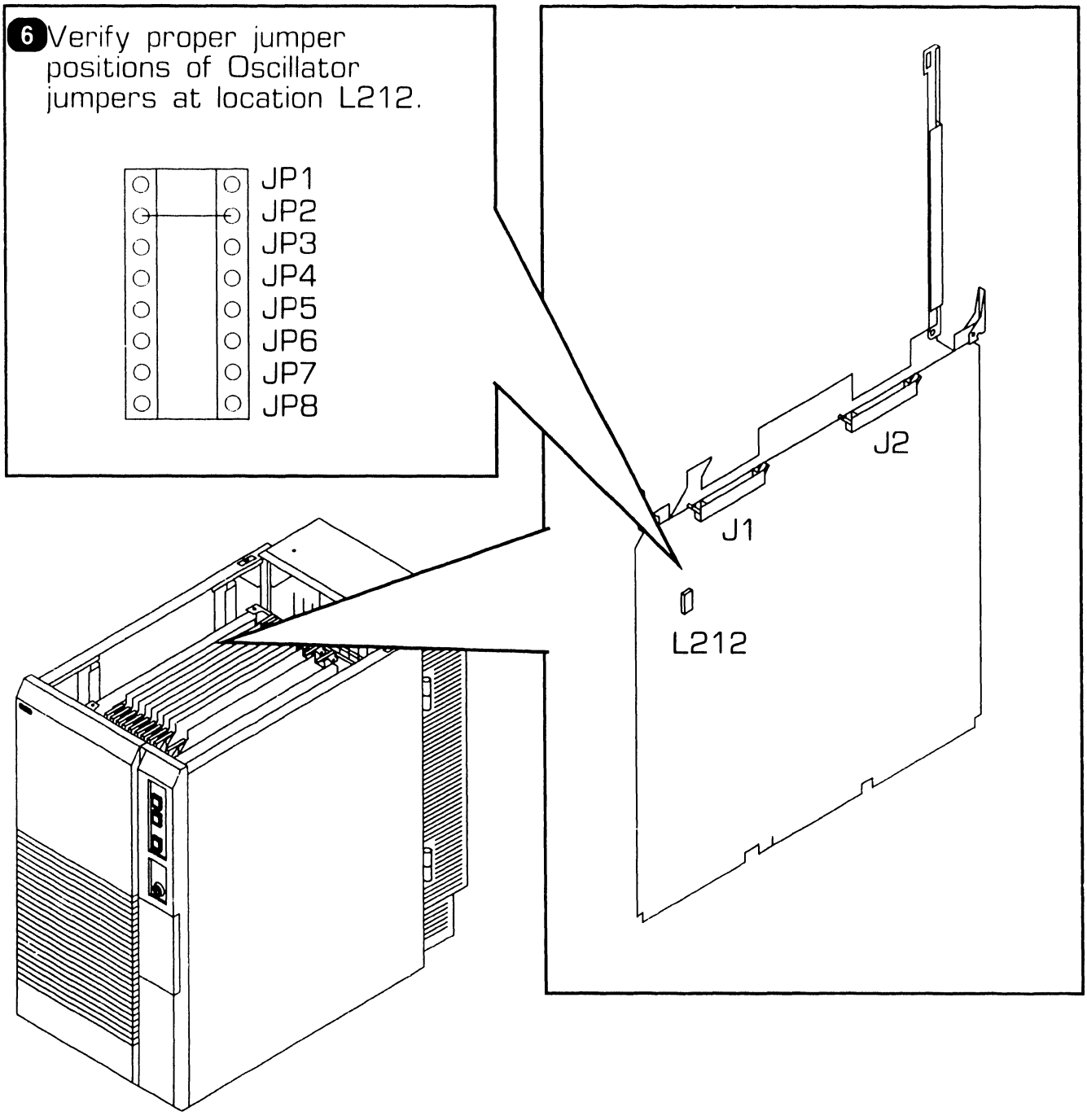

● END

7.2 Mainframe Removal Procedures

7.2.8 Address Translation Unit (ATU) Removal (Sheet 1 of 2)

1. Power off mainframe and disconnect ac power. (➡4.2)
2. Remove top cover. (➡7.2.1)
3. Remove card cage cover. (➡7.2.4)

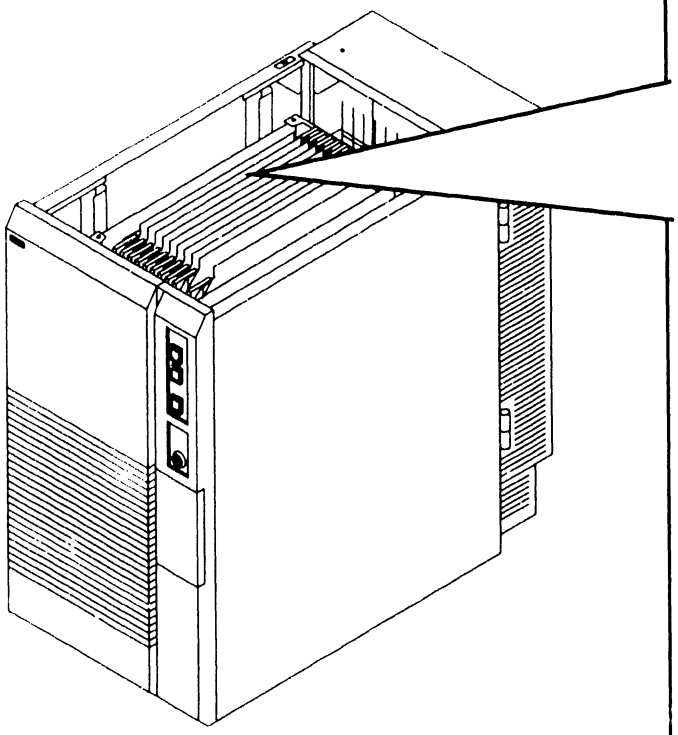

4. Open cable clamp to the right. Note cable position and remove 50-pin cable from connector J1 (ATU J1 to AGU J2).

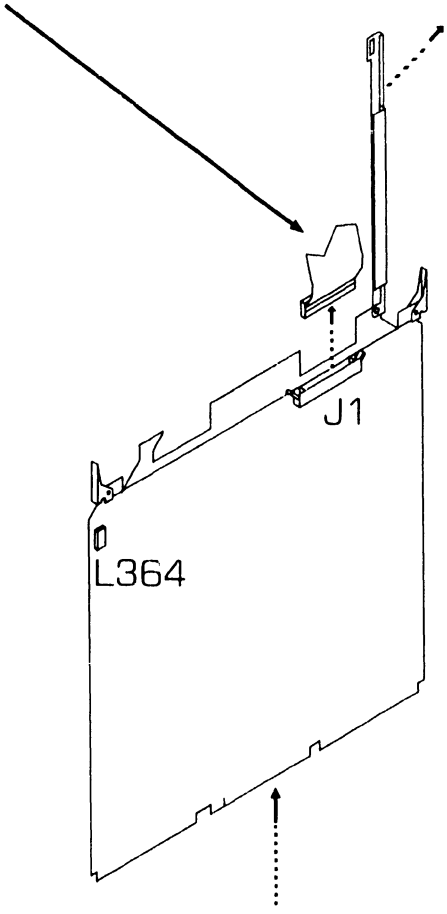

5. Remove PCB from backplane. (➡7.2.5)

➡NEXT

7.2 Mainframe Removal Procedures

7.2.8 Address Translation Unit (ATU) Removal (Sheet 2 of 2)

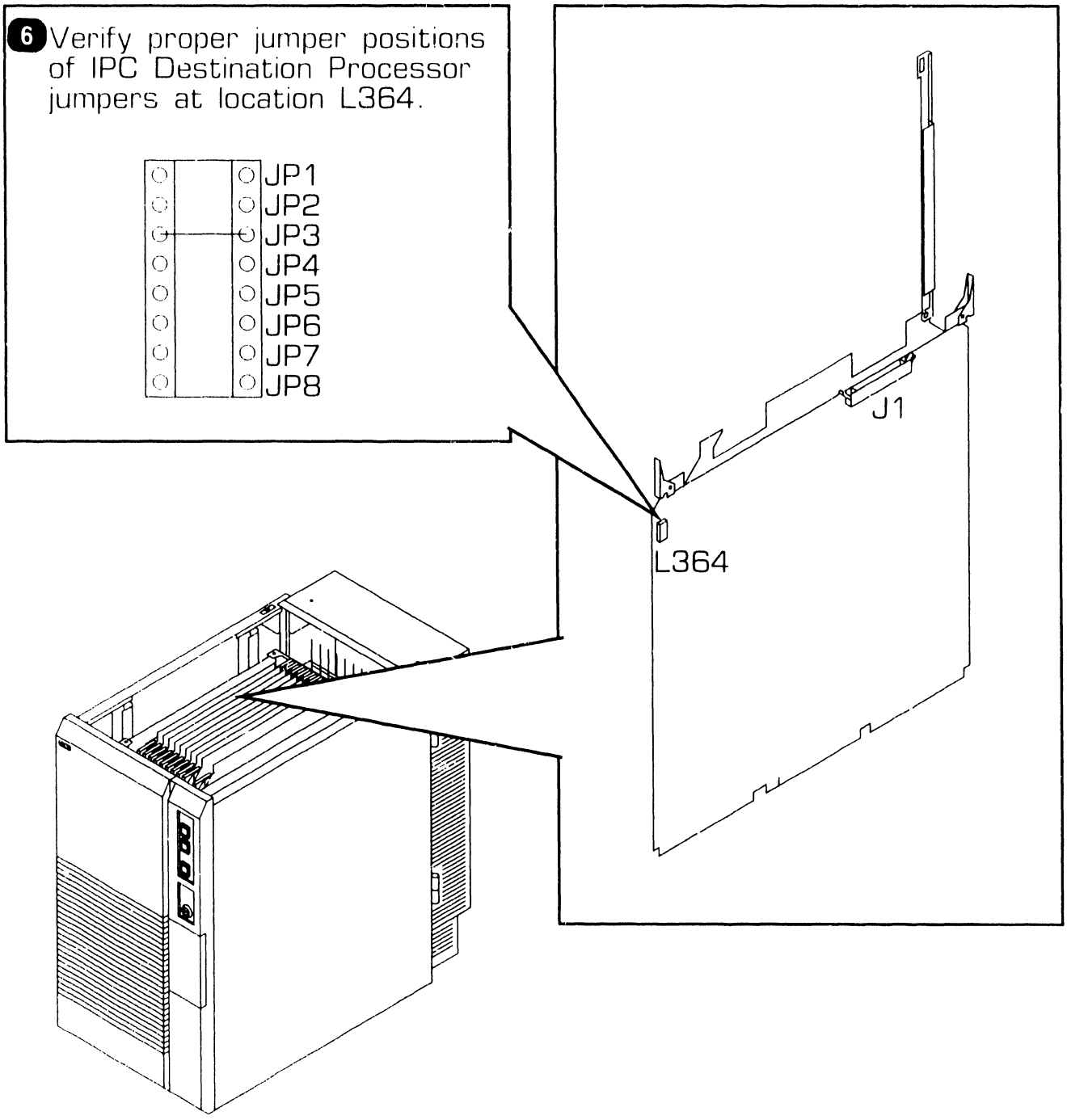

● END

7.2 Mainframe Removal Procedures

7.2.9 Support Control Unit (SCU) Removal

1. Power off mainframe and disconnect ac power. (➡4.2)
2. Remove top cover. (➡7.2.1)
3. Remove card cage cover. (➡7.2.4)

NOTE

The Support Control Unit does not contain any jumpers, switches or cables.

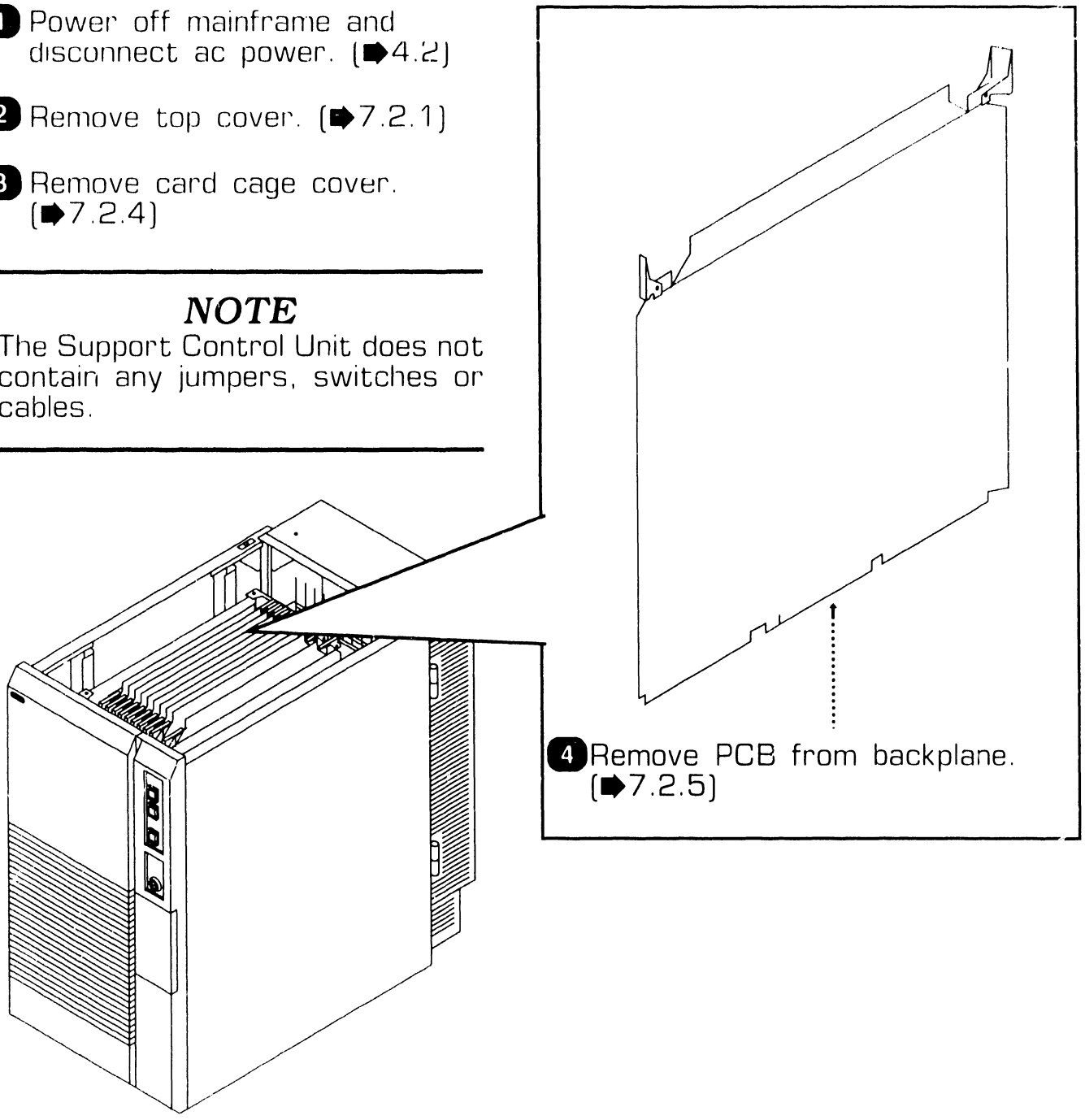

4. Remove PCB from backplane. (➡7.2.5)

● END

7.2 Mainframe Removal Procedures

7.2.10 Memory Control Unit (MCU) Removal (Sheet 1 of 2)

1. Power off mainframe and disconnect ac power. (➡4.2)
2. Remove top cover. (➡7.2.1)
3. Remove card cage cover. (➡7.2.4)

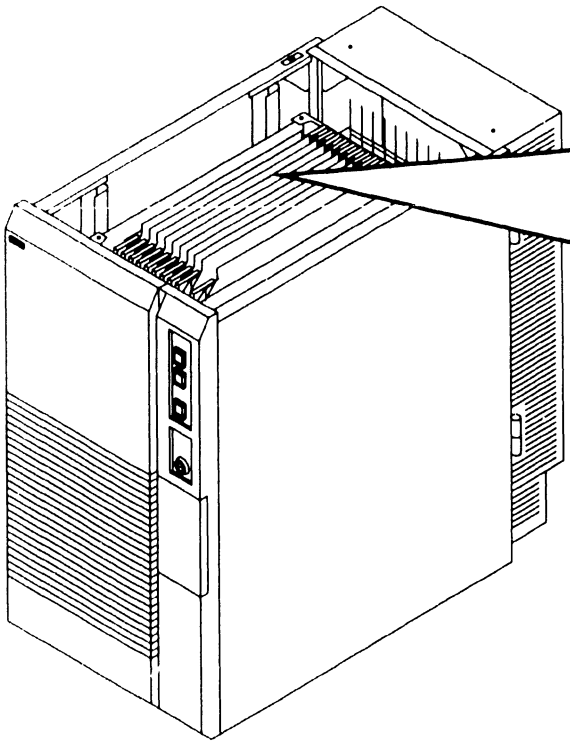

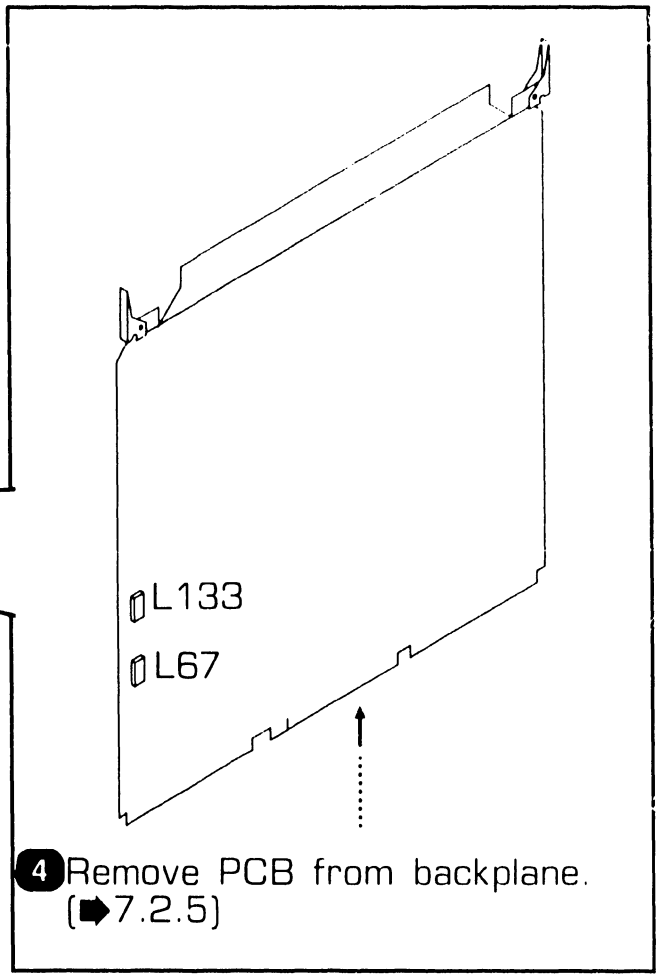

4. Remove PCB from backplane. (➡7.2.5)

➡NEXT

7.2 Mainframe Removal Procedures

7.2.10 Memory Control Unit (MCU) Removal (Sheet 2 of 2)

5 Verify proper jumper positions of MCU System Address ID jumpers at location L67.

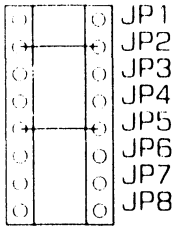

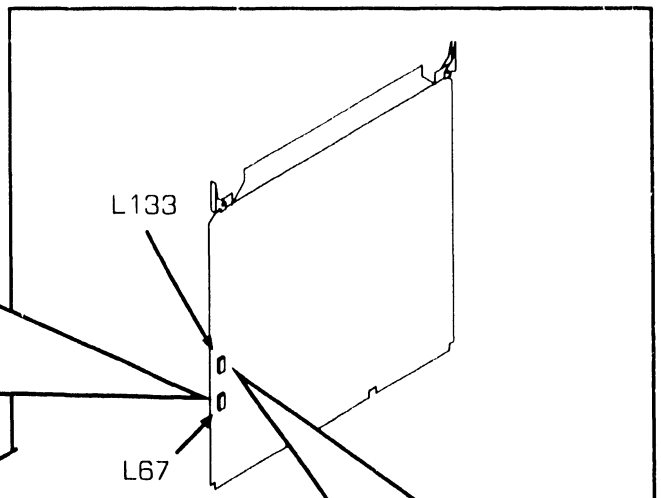

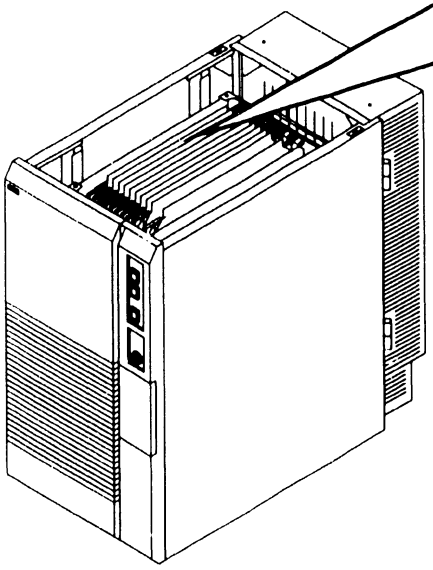

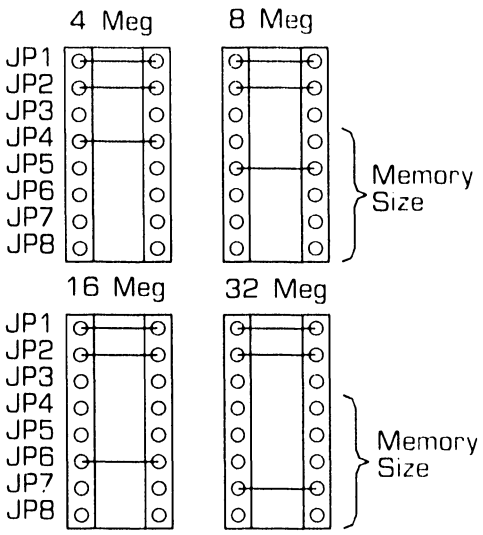

6 Verify proper jumper positions of MCU Support Packet Bus ID jumpers (JP1 - JP3) and Main Memory Size Selection jumpers (JP4 - JP8) at location L133.

● END

NOTE

MCU Main Memory Size Selection jumpers setting must correspond to the Main Memory board memory configuration. (➡7.2.11, 7.2.12)

7.2 Mainframe Removal Procedures

7.2.11 Main Memory (MEM) Board (210-8703/-1) Removal (Sheet 1 of 2)

1. Power off mainframe and disconnect ac power. (➡4.2)
2. Remove top cover. (➡7.2.1)
3. Remove card cage cover. (➡7.2.4)

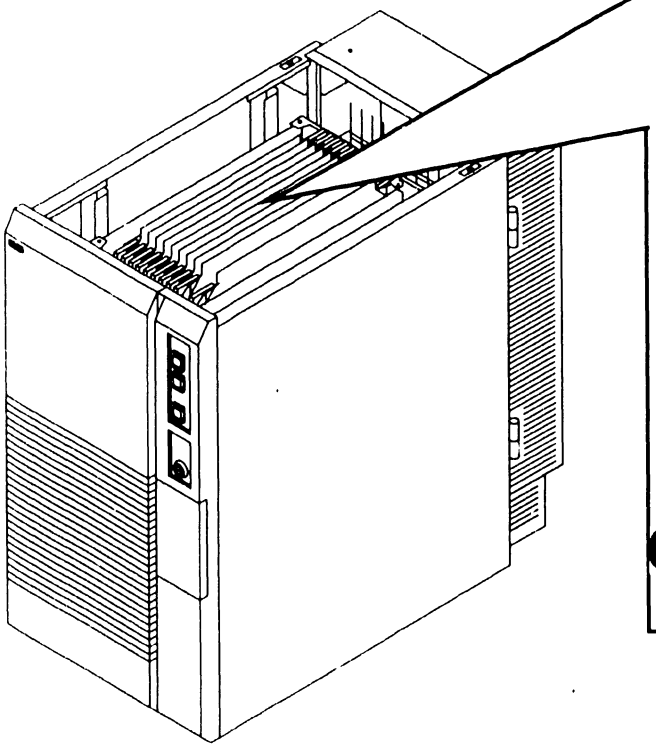

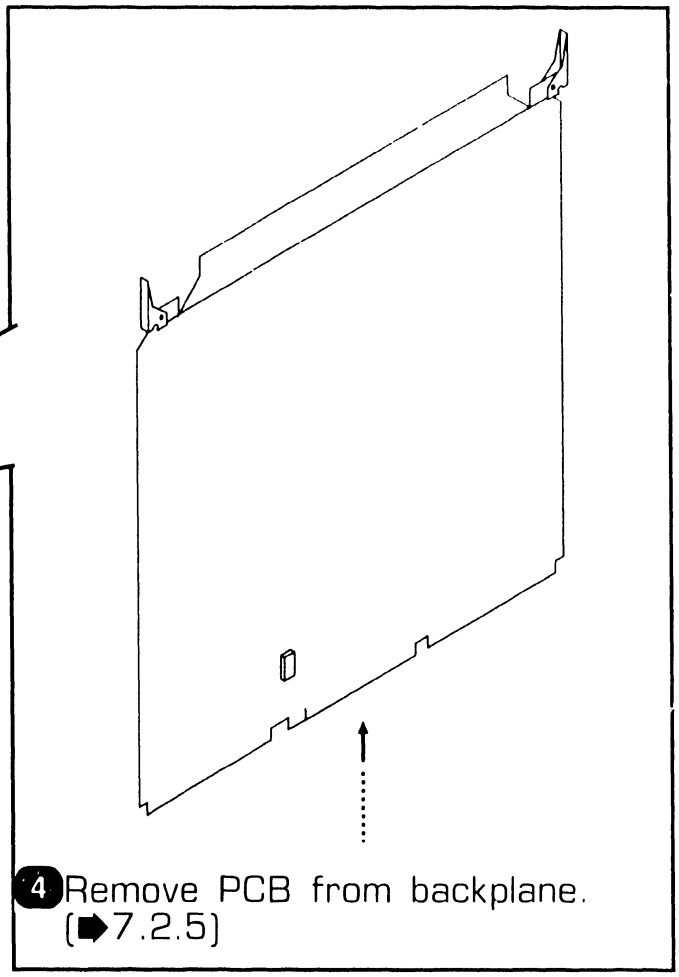

4. Remove PCB from backplane. (➡7.2.5)

➡NEXT

7.2.11 Main Memory (MEM) Board (210-8703/-1) Removal (Sheet 2 of 2)

NOTE

Main Memory board DRAM loading jumper configuration must correspond to the Memory Control Unit Memory Size jumper setting. (→ 7.2.10)

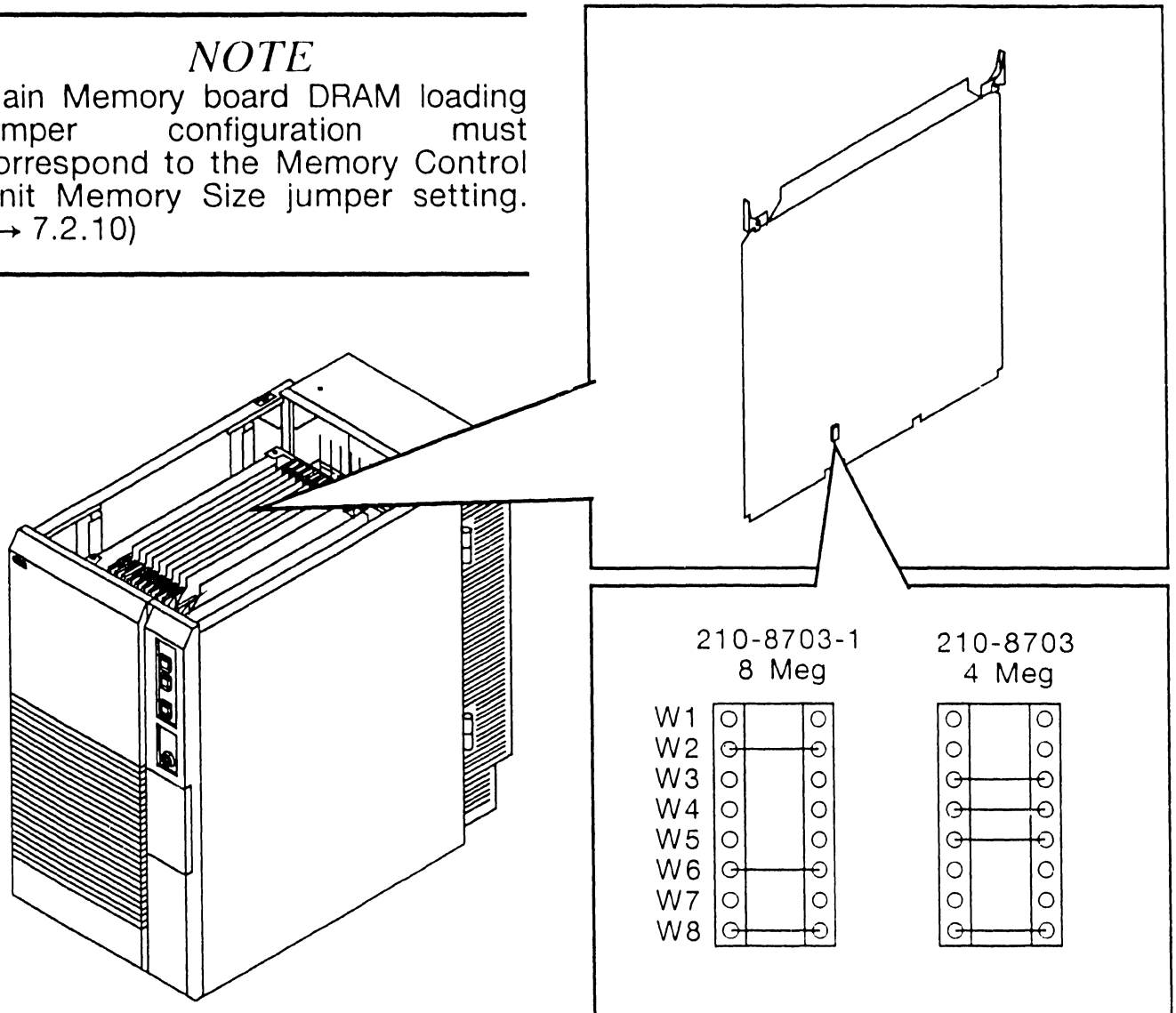

5 Verify proper jumper positions of Main Memory DRAM loading jumpers.

● END

7.2 Mainframe Removal Procedures

7.2.12 Main Memory (MEM) Board (210-9874/-1) Removal (Sheet 1 of 2)

1. Power off mainframe and disconnect ac power. (➡4.2)
2. Remove top cover. (➡7.2.1)
3. Remove card cage cover. (➡7.2.4)

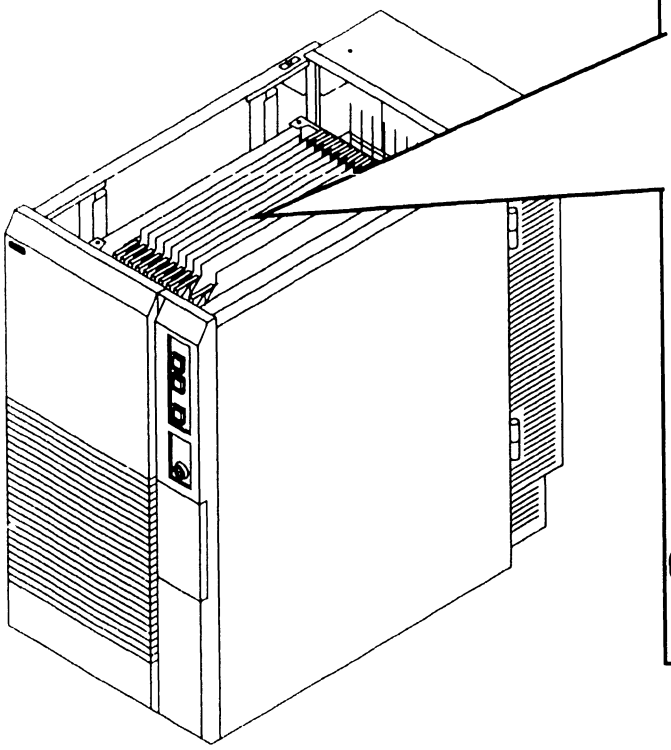

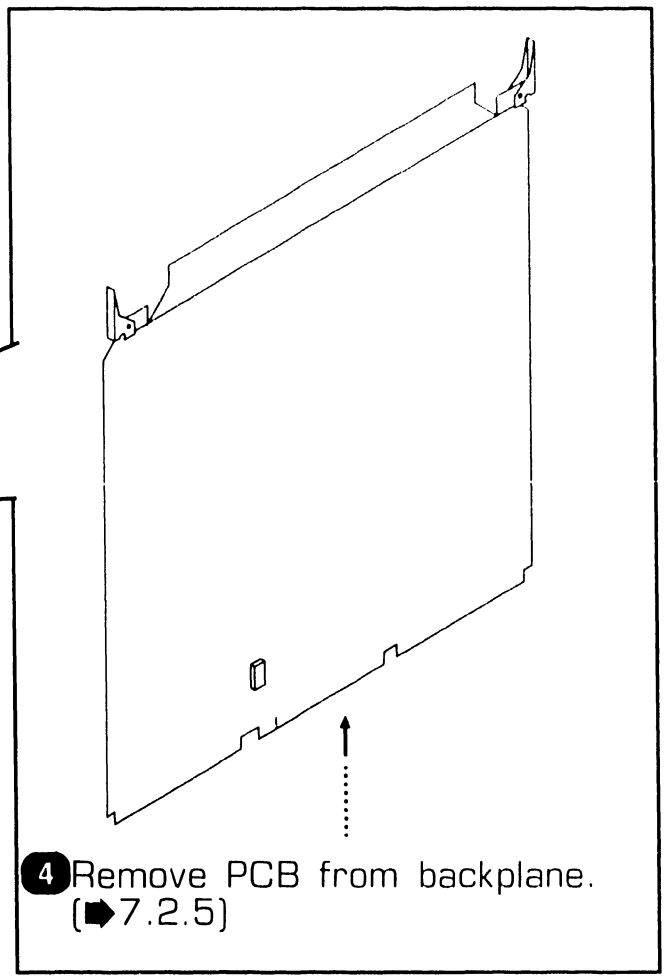

4. Remove PCB from backplane. (➡7.2.5)

➡NEXT

7.2.12 Main Memory (MEM) Board (210-9874/-1) Removal (Sheet 2 of 2)

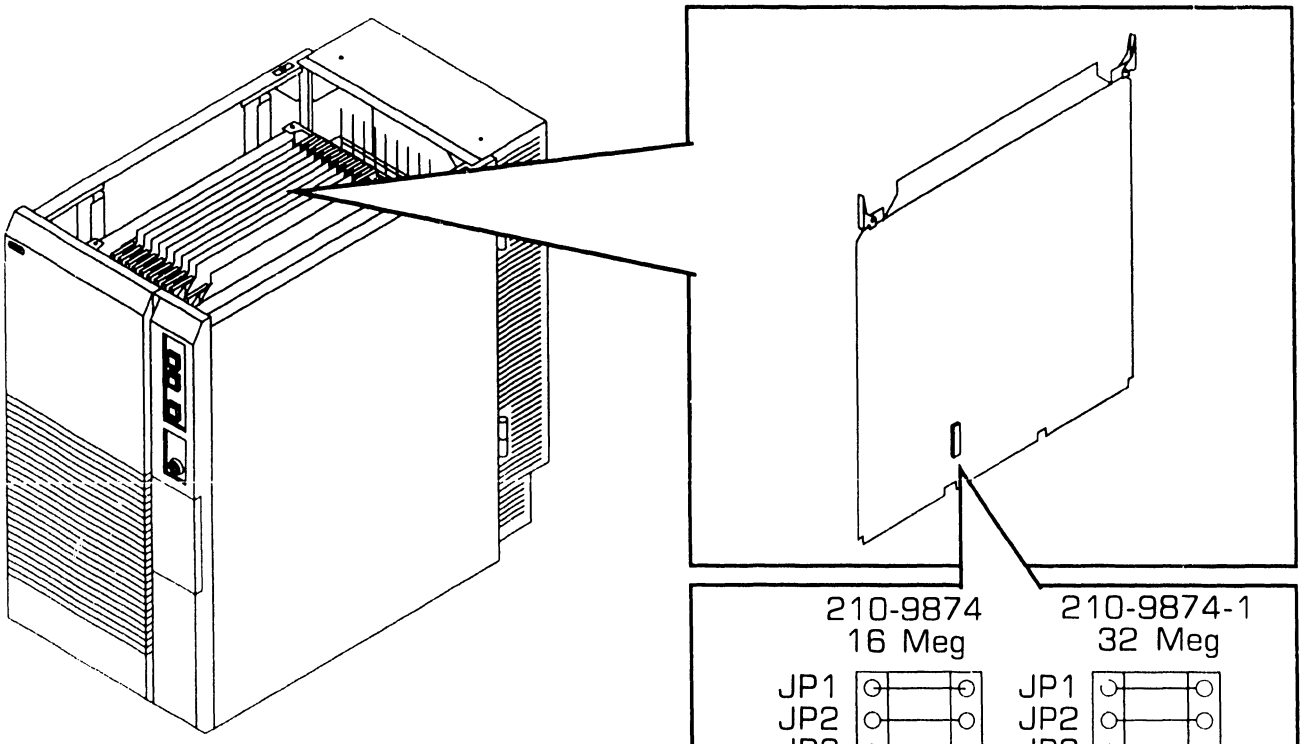

NOTE

Main Memory board jumper configuration must correspond to the Memory Control Unit Memory Size jumper setting. (➡7.2.10)

5 Verify proper jumper positions of Main Memory DRAM loading jumpers.

● END

7.2 Mainframe Removal Procedures

7.2.13 System Bus Interface (SBI) Removal (Sheet 1 of 2)

1. Power off mainframe and disconnect ac power. (➡4.2)
2. Remove top cover. (➡7.2.1)
3. Remove card cage cover. (➡7.2.4)
4. Remove PCB from backplane. (➡7.2.5)

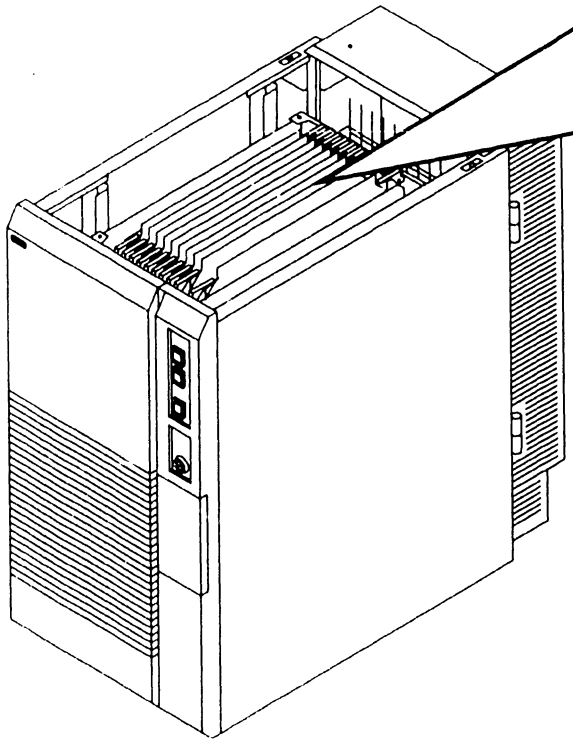

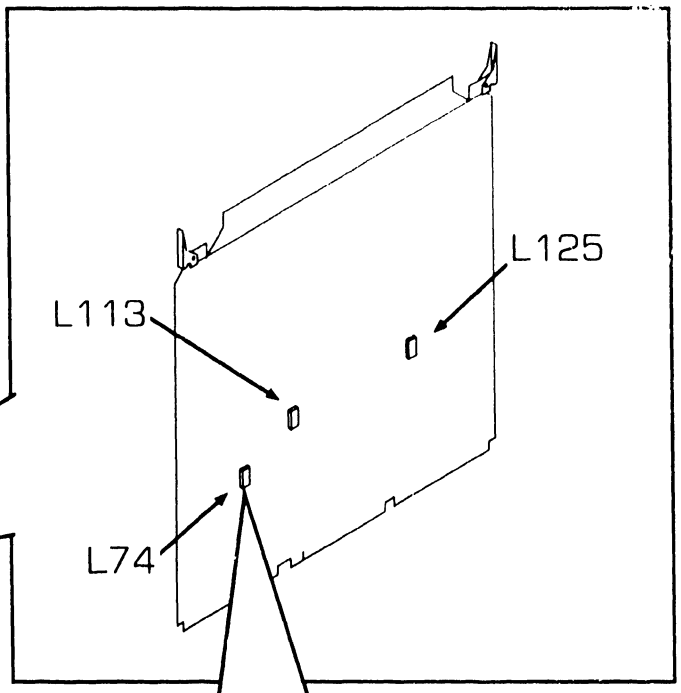

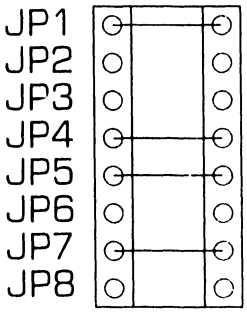

5. Verify proper jumper positions of SBI ID jumpers at location L74.

➡NEXT

7.2 Mainframe Removal Procedures

7.2.13 System Bus Interface (SBI) Removal (Sheet 2 of 2)

6 Verify proper jumper positions of SPB Target ID jumpers at location L113.

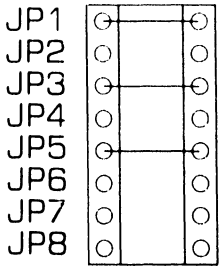

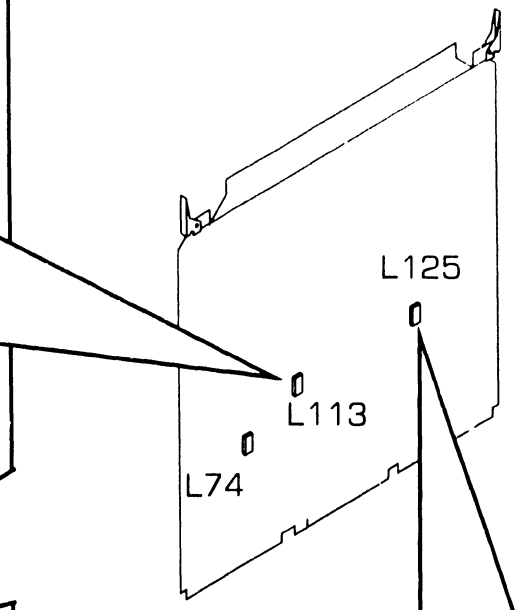

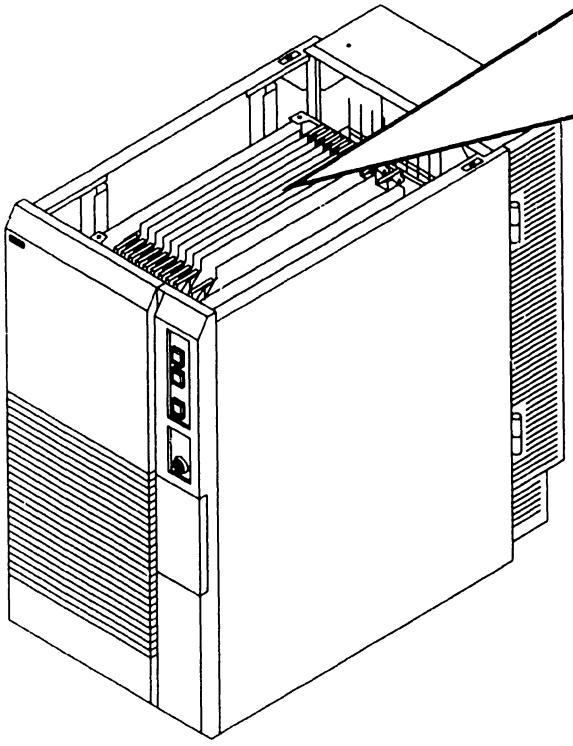

7 Verify proper jumper positions of I/O Clock Speed jumpers at location L125.

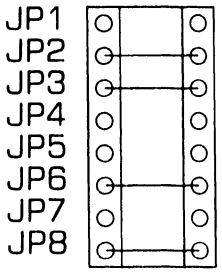

● END

7.2 Mainframe Removal Procedures

7.2.14 SMD IOC (23V98-4) Removal (Sheet 1 of 3)

1. Power off mainframe and disconnect ac power. (➡4.2)
2. Remove top cover. (➡7.2.1)
3. Remove card cage cover. (➡7.2.4)

NOTE

The first SMD IOC ***Must Be*** installed in I/O Slot 1. A second SMD Controller IOC (if used) should be installed in I/O Slot 2.

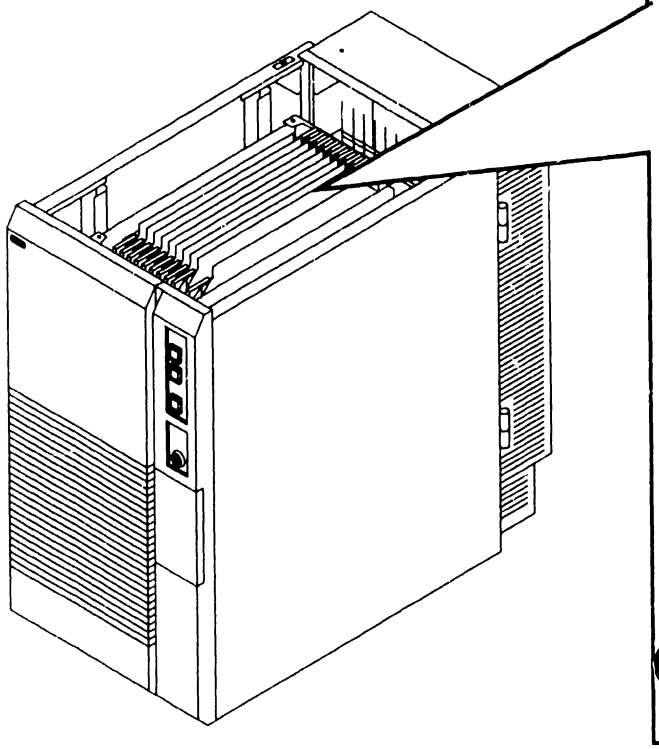

4. Note cable positions and remove 'A' cable from connector J5 and 'B' cables from connectors J4, J3, J2, and J1 (if installed).

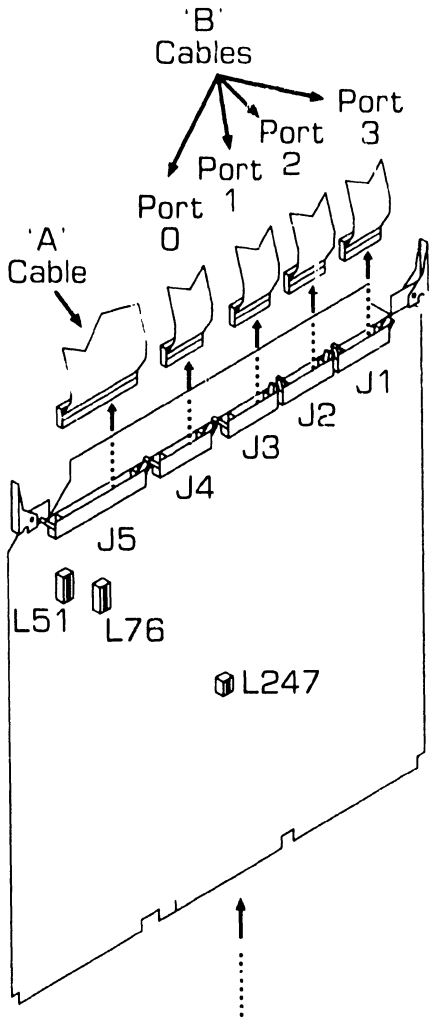

5. Remove PCB from backplane. (➡7.2.5)

➡NEXT

7.2 Mainframe Removal Procedures

7.2.14 SMD IOC (23V98-4) Removal (Sheet 2 of 3)

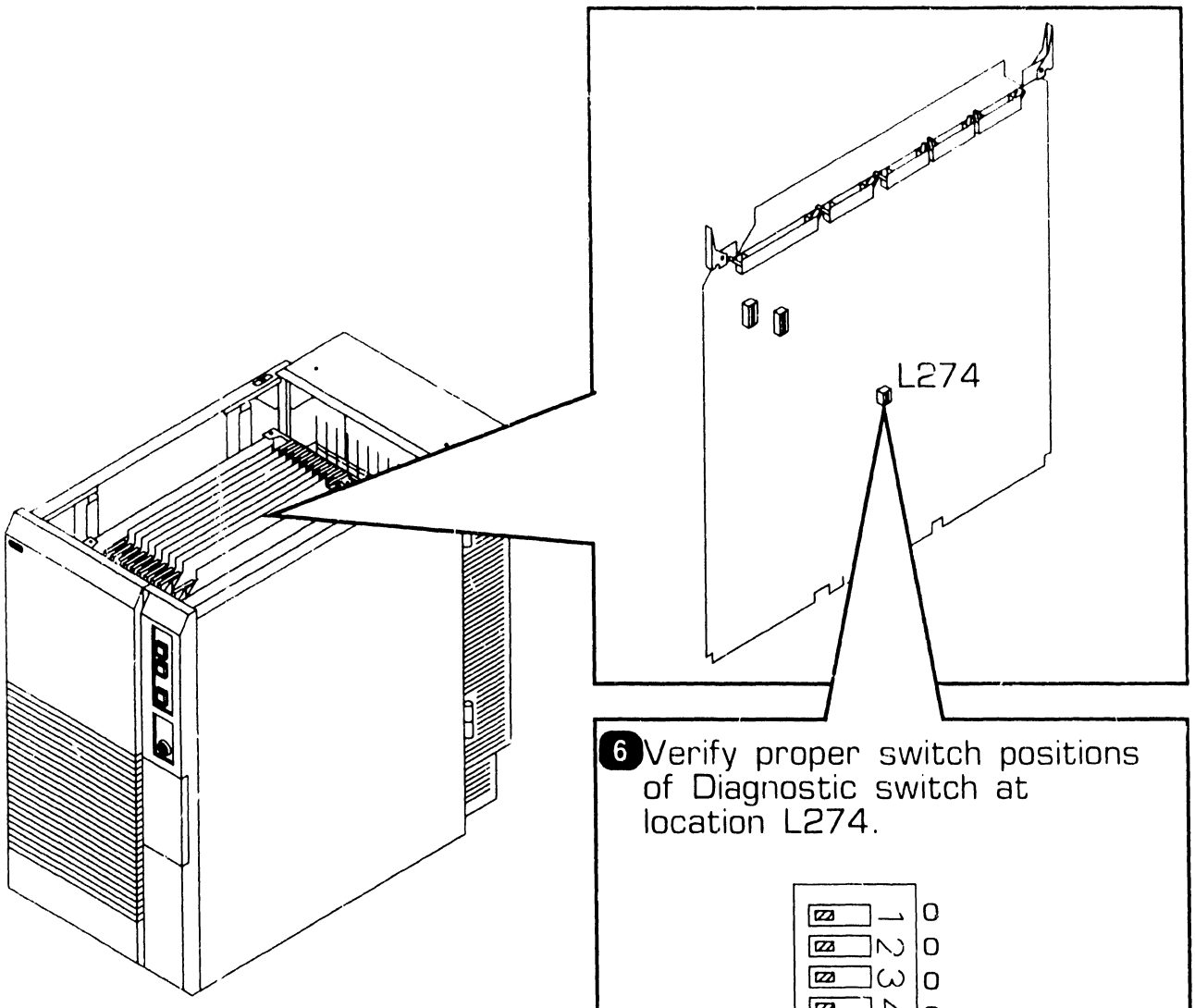

6 Verify proper switch positions of Diagnostic switch at location L274.

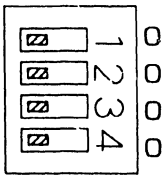

▨ = Switch Position
O = Open Contacts
X = Closed Contacts

➡NEXT

7.2 Mainframe Removal Procedures

7.2.14 SMD IOC (23V98-4) Removal (Sheet 3 of 3)

7 Verify proper switch settings for drive-types (or no drive) installed on each port; L51 Ports 0 and 1, and L76 Ports 2 and 3.

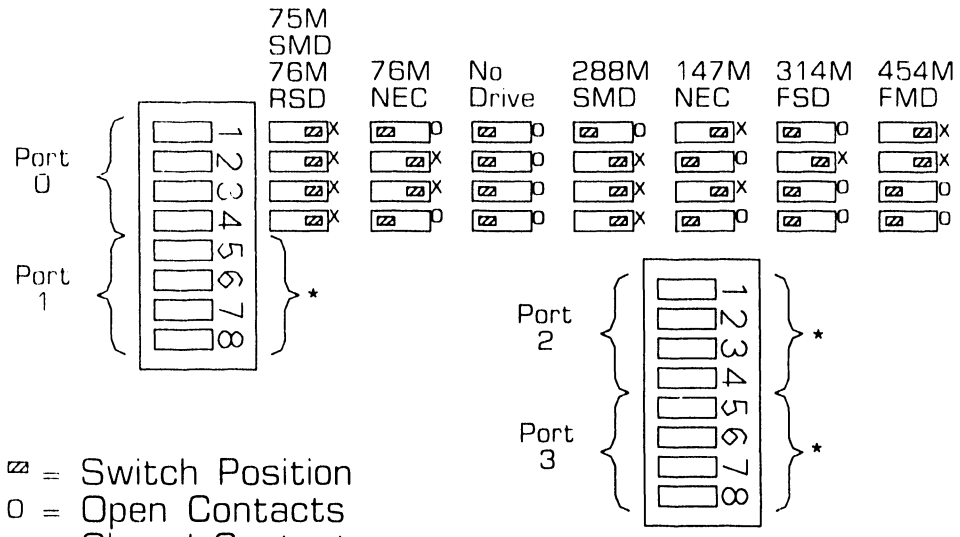

▨ = Switch Position
O = Open Contacts
X = Closed Contacts

* Refer to Port 0 for switch settings.

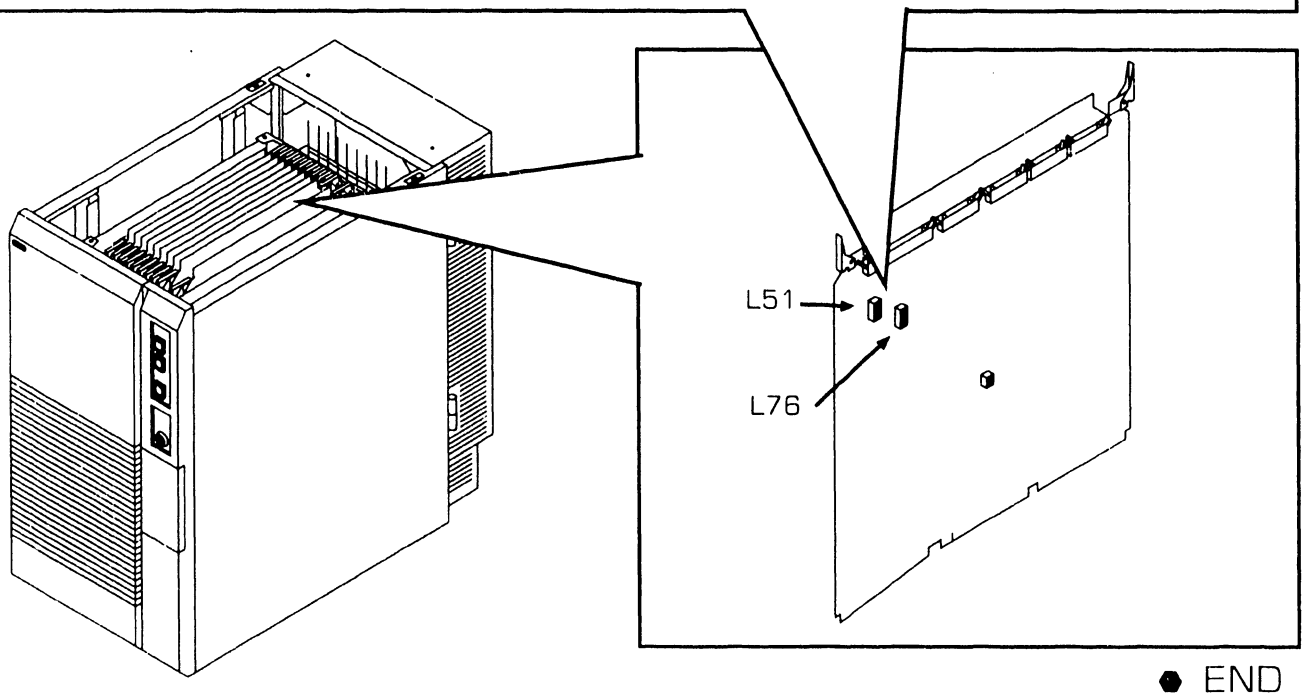

● END

7.2.15 Serial IOC (23V67) Removal (Sheet 1 of 2)

1. Power off mainframe and disconnect ac power. (→ 4.2)
2. Remove top cover. (→ 7.2.1)
3. Remove card cage cover. (→ 7.2.4)

NOTE

The first Serial IOC (supporting the SCU (port 0)) *Must Be* installed in I/O slot 3. Additional Serial IOCs can be installed in any available I/O slot.

NOTE

Serial IOC Connector J1 is reserved for P-Band. No other type of device should be attached.

P-Band Modem must be installed in the cable concentrator due to rear panel bulkhead restrictions.

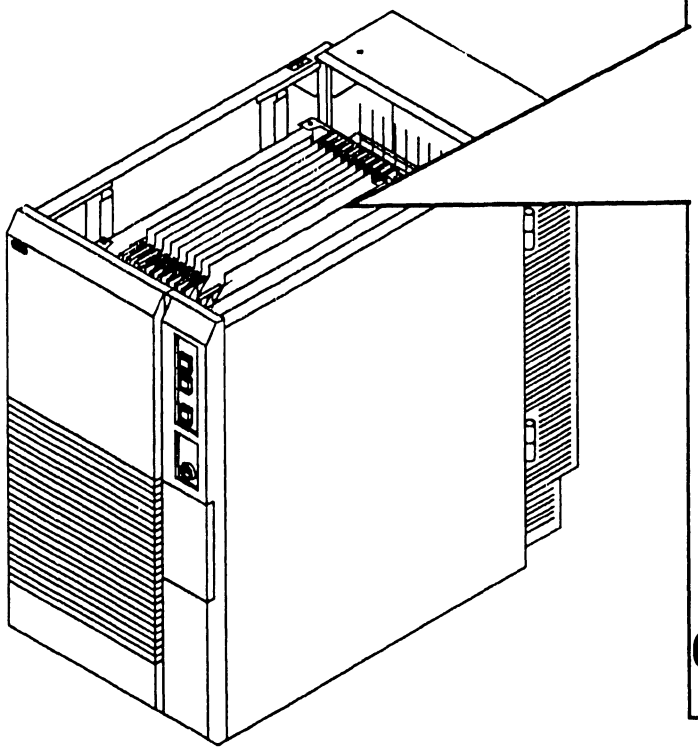

4. Note cable positions and remove 34-pin EAPA cable from connector J2 and 34-pin P-Band Modem cable from connector J1 (if installed).

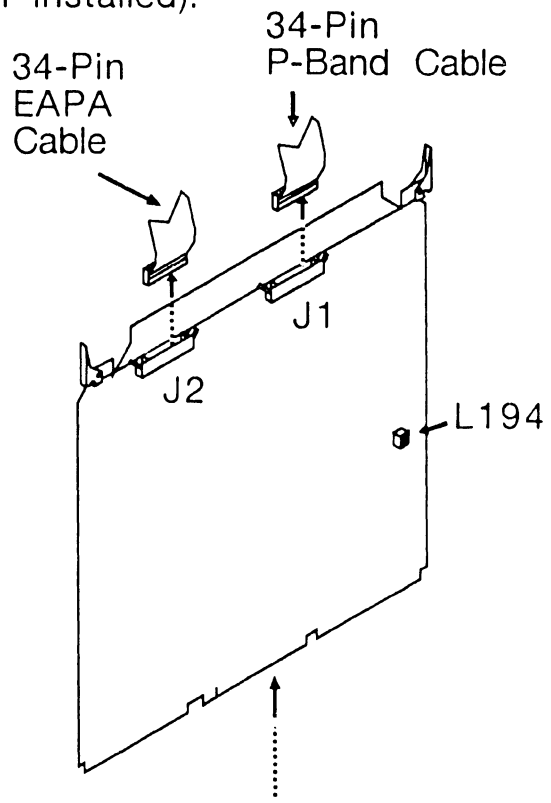

5. Remove PCB from backplane. (→ 7.2.5)

➡NEXT

7.2.15 Serial IOC (23V67) Removal (Sheet 2 of 2)

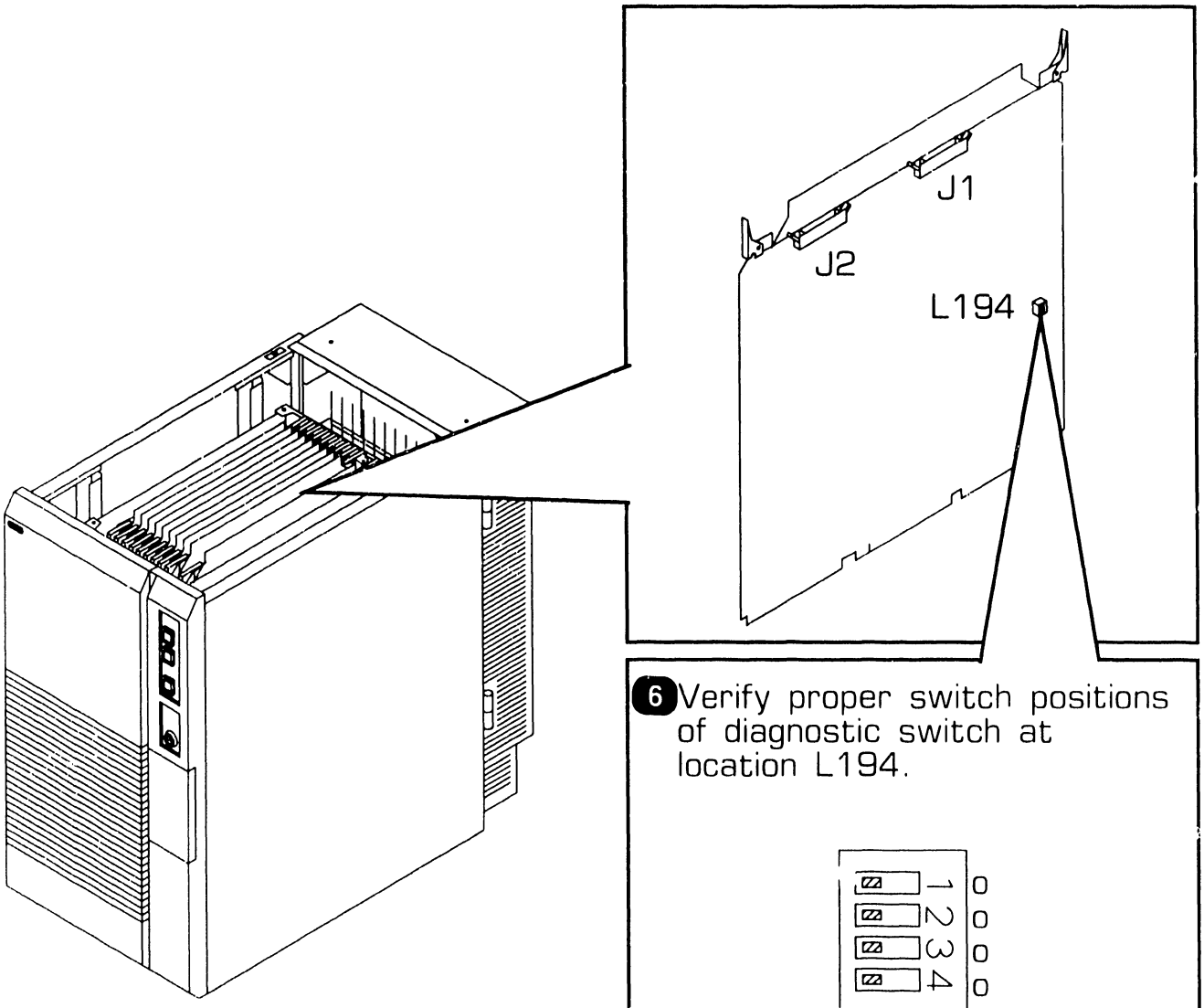

6 Verify proper switch positions of diagnostic switch at location L194.

▨ = Switch Position
O = Open Contacts
X = Closed Contacts

● END

7.2 Mainframe Removal Procedures

7.2.16 Kennedy Tape (23V95-1) IOC Removal (Sheet 1 of 2)

1. Power off mainframe and disconnect ac power. (➡4.2)
2. Remove top cover. (➡7.2.1)
3. Remove card cage cover. (➡7.2.4)

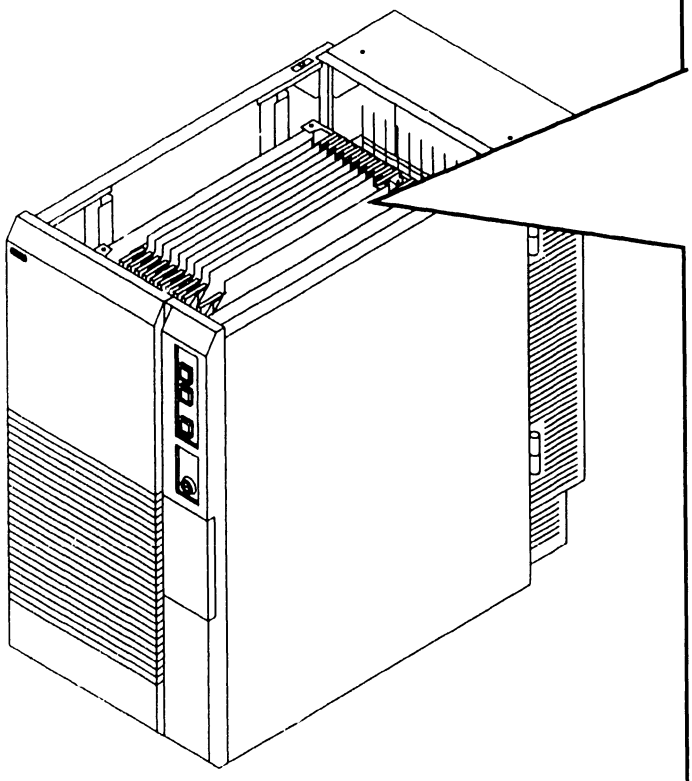

4. Note cable positions and remove 50-pin data cable from connector J1 and 50-pin control cable from connector J2.

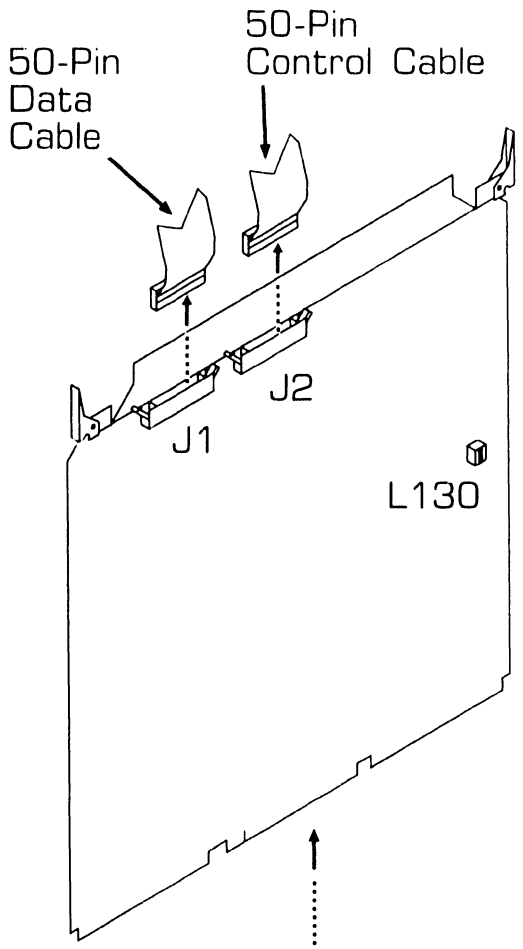

5. Remove PCB from backplane. (➡7.2.5)

➡NEXT

7.2.16 Kennedy Tape (23V95-1) IOC Removal (Sheet 2 of 2)

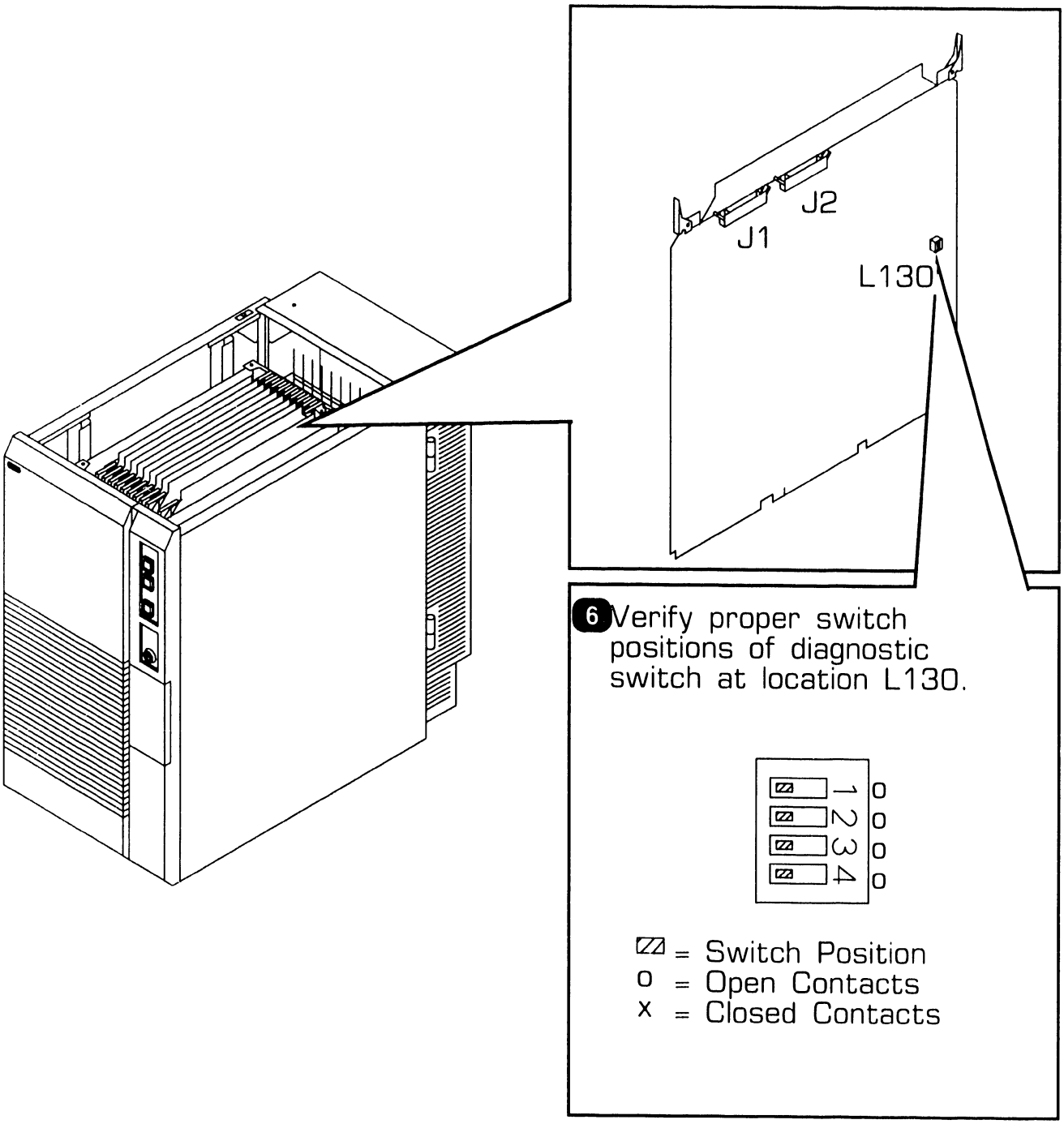

6 Verify proper switch positions of diagnostic switch at location L130.

▨ = Switch Position
o = Open Contacts
x = Closed Contacts

● END

7.2 Mainframe Removal Procedures

7.2.17 Telex Tape (23V95-2) IOC Removal (Sheet 1 of 2)

1. Power off mainframe and disconnect ac power. (➡4.2)
2. Remove top cover. (➡7.2.1)
3. Remove card cage cover. (➡7.2.4)

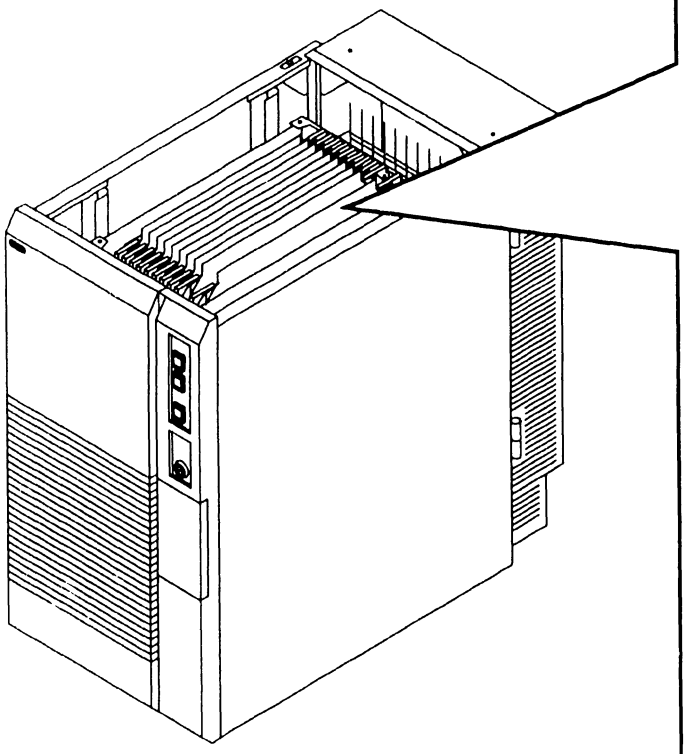

4. Note cable positions and remove 50-pin status cable from connector J3, 50-pin data cable from connector J2, and 50-pin control cable from connector J1.

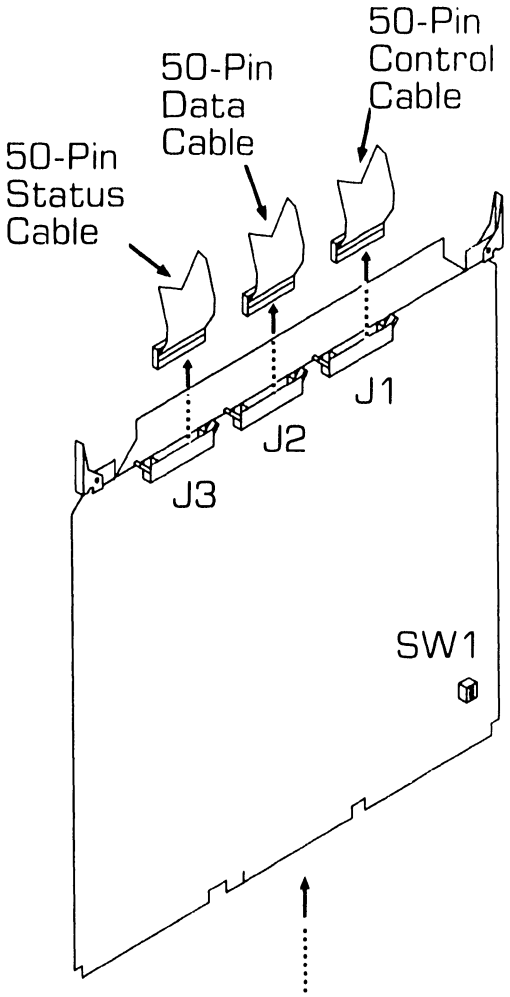

5. Remove PCB from backplane. (➡7.2.5)

➡NEXT

7.2 Mainframe Removal Procedures

7.2.17 Telex Tape (23V95-2) IOC Removal (Sheet 2 of 2)

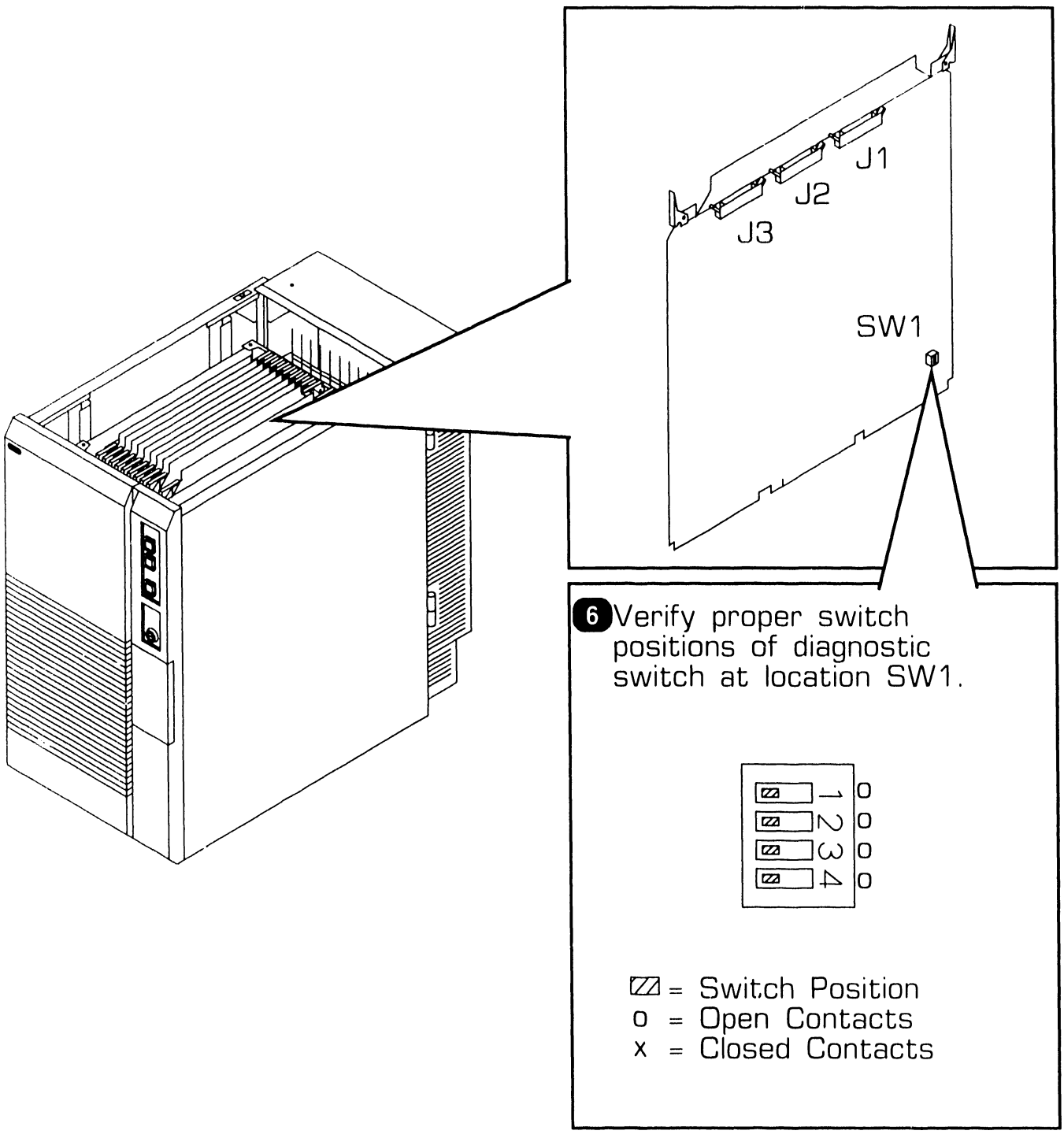

6 Verify proper switch positions of diagnostic switch at location SW1.

▨ = Switch Position
o = Open Contacts
x = Closed Contacts

● END

7.2 Mainframe Removal Procedures

7.2.18 Multiline TC (23V86/96) IOC Removal (Sheet 1 of 2)

1. Power off mainframe and disconnect ac power. (➡4.2)
2. Remove top cover. (➡7.2.1)
3. Remove card cage cover. (➡7.2.4)

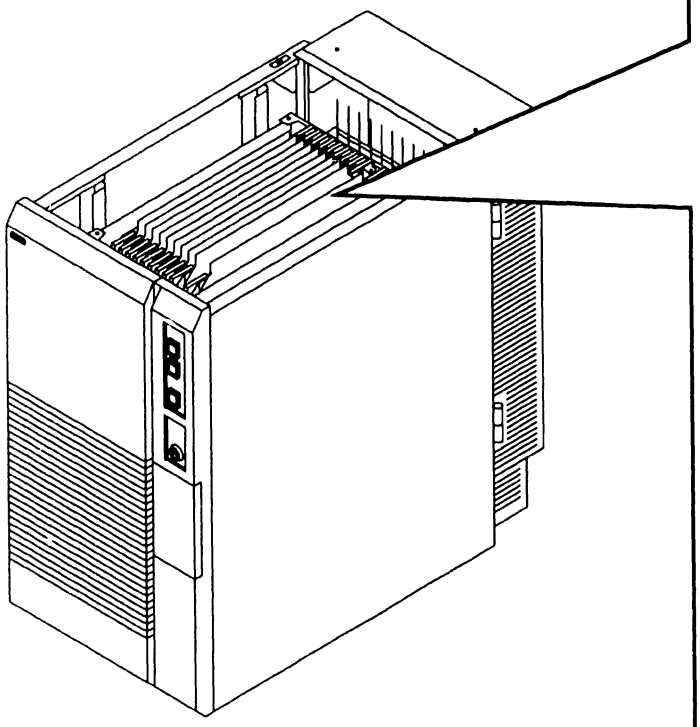

4. Note cable positions and remove 50-pin Port 0-3 cable from connector J1, 50-pin Port 4-7 cable from connector J2, 50-pin Port 8-11 cable from connector J3, and 50-pin Port 12-15 cable from connector J4 (if installed).

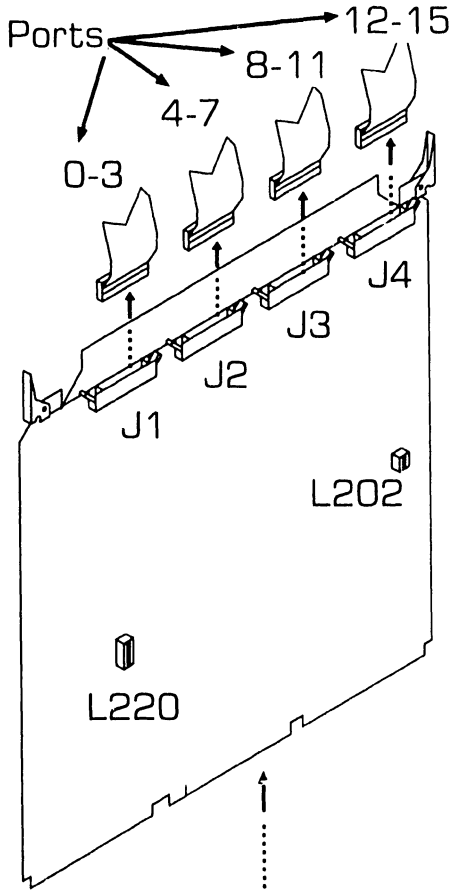

5. Remove PCB from backplane. (➡7.2.5)

➡NEXT

7.2.18 Multiline TC (23V86/96) IOC Removal (Sheet 2 of 2)

6 Verify proper switch positions of diagnostic switch at location L202.

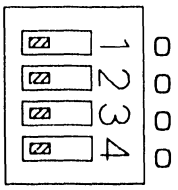

▨ = Switch Position
O = Open Contacts
X = Closed Contacts

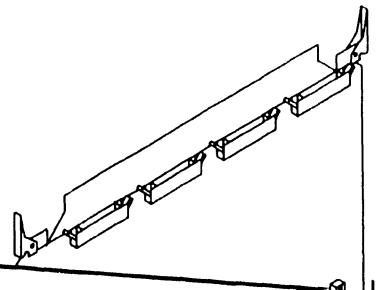

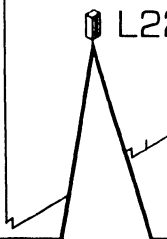

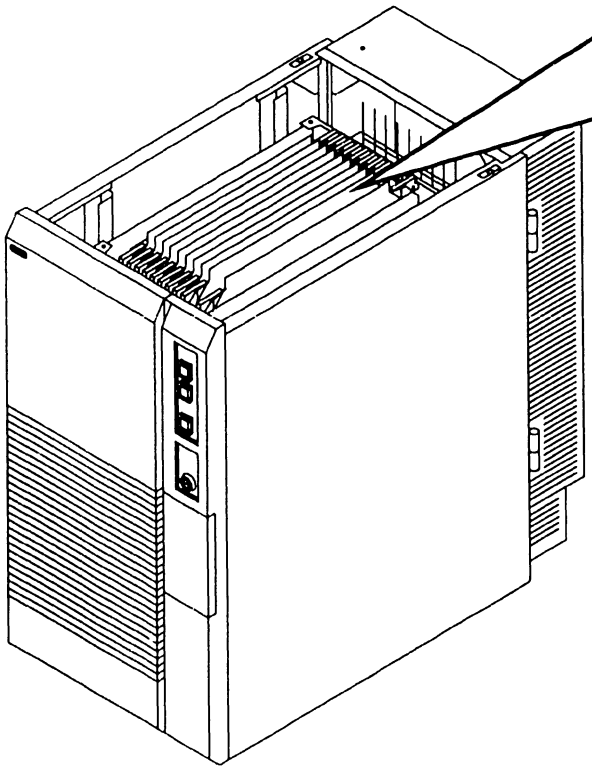

7 Verify proper switch positions of diagnostic port select switch at location L220.

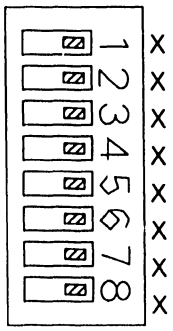

▨ = Switch Position
O = Open Contacts
X = Closed Contacts

● END

7.2.19 Power Supply Controller Board Removal (Sheet 1 of 3)

1. Power off mainframe and disconnect ac power. (➡4.2)
2. Remove top cover. (➡7.2.1)
3. Remove front cover. (➡7.2.2)
4. Remove right side cover. (➡7.2.3)
5. Remove 9-pin cable from connector J1, 4-pin cable from connector J3, 60-pin cable from connector J6, 20-pin cable from connector J7, and 5-pin cable from connector J9.

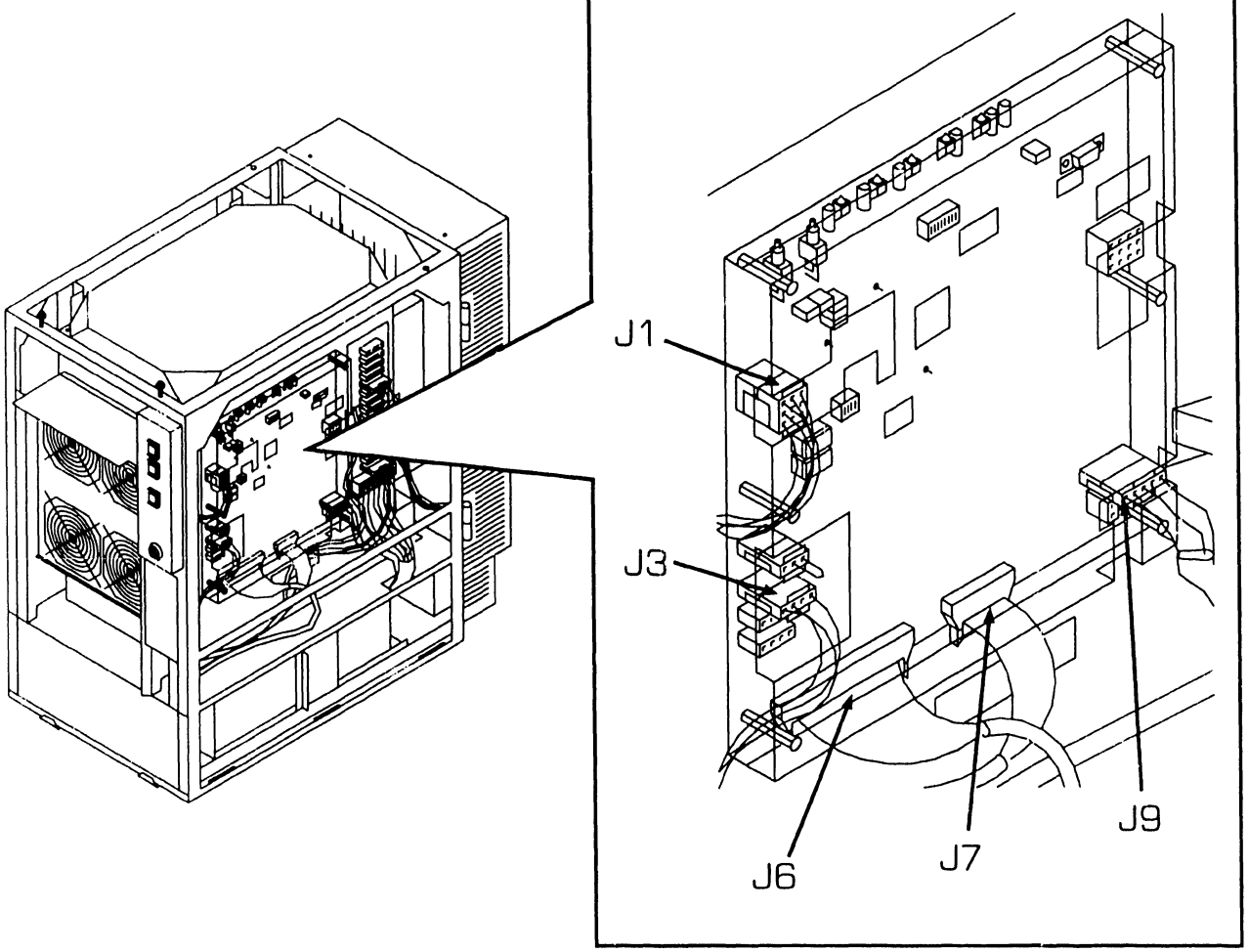

➡NEXT

7.2.19 Power Supply Controller Board Removal (Sheet 2 of 3)

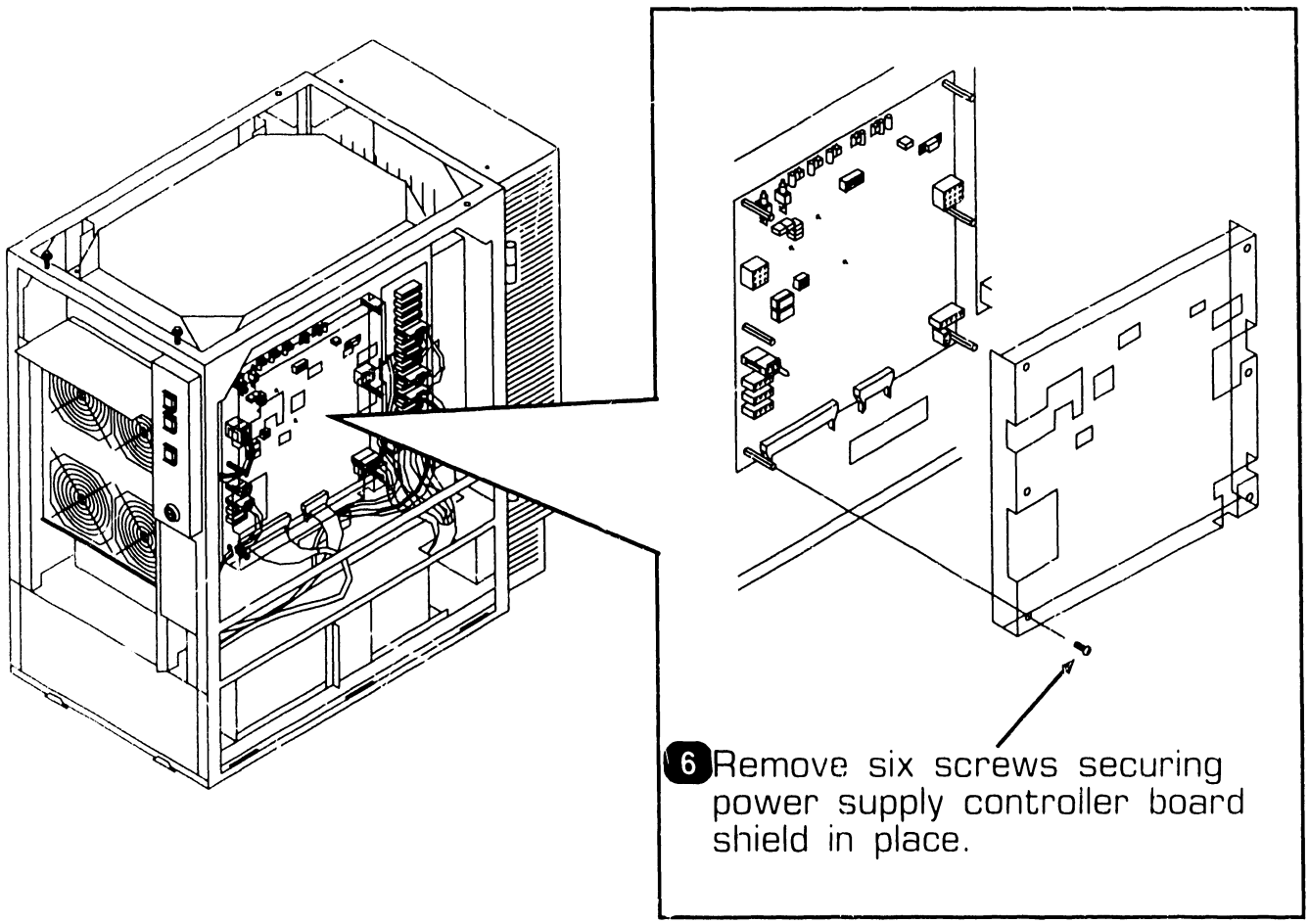

6 Remove six screws securing power supply controller board shield in place.

➡NEXT

7.2.19 Power Supply Controller Board Removal (Sheet 3 of 3)

NOTE

Power Supply Controller Board contains two switch banks; SW3 and SW4.

Switch SW3 A/D Convertor Voltage Address switch will be set to the last A/D Convertor voltage address adjusted. (➡8.2.2)

Switch SW4 is not used. Disregard any switch settings.

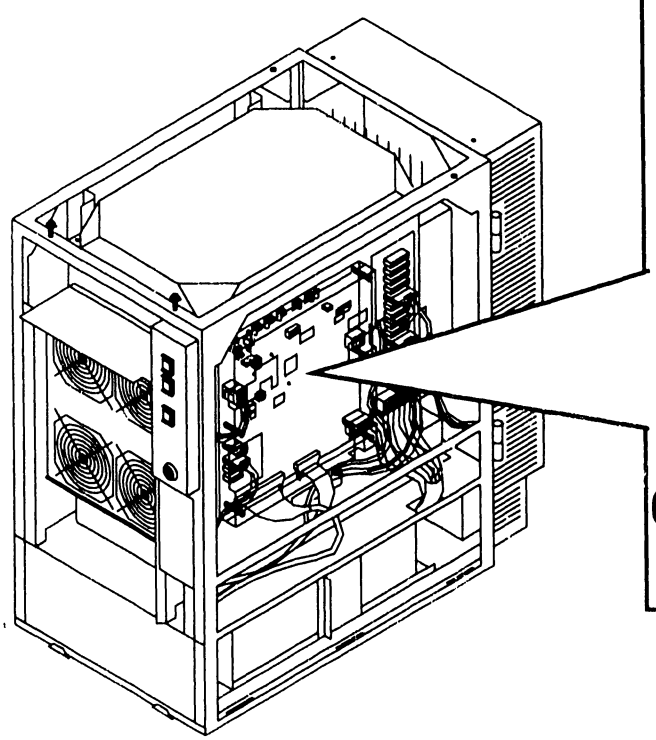

7 Remove six threaded stand-offs securing power supply controller board to card cage.

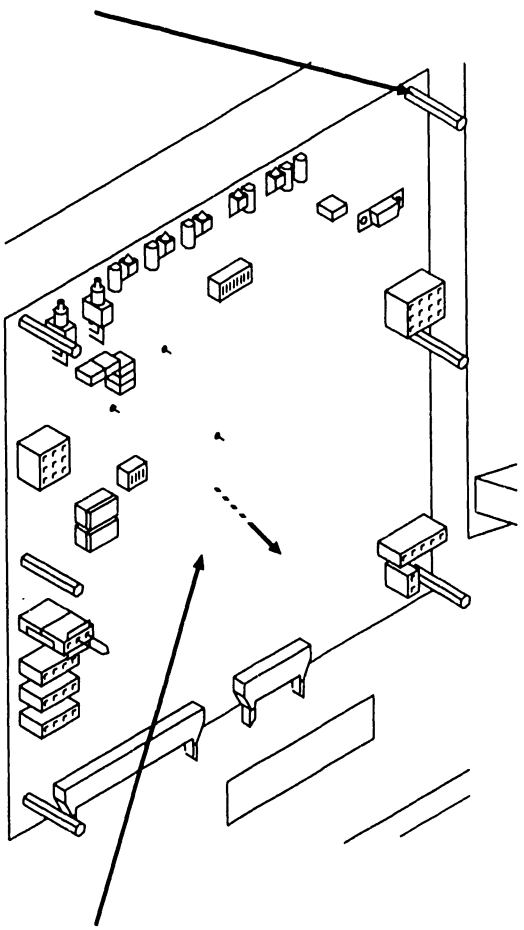

8 Remove Power Supply Controller board.

● END

7.2 Mainframe Removal Procedures

7.2.20 DC Power Distribution Unit (DC PDU) Removal (Sheet 1 of 3)

1. Power off mainframe and disconnect ac power. (➡4.2)
2. Remove top cover. (➡7.2.1)
3. Remove front cover. (➡7.2.2)
4. Remove right side cover. (➡7.2.3)

NOTE

DC PDU connectors J1 - J15 are in parallel. DC power cables can be installed in any available connector location.

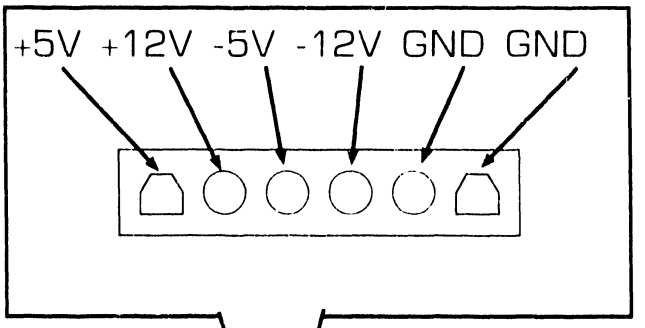

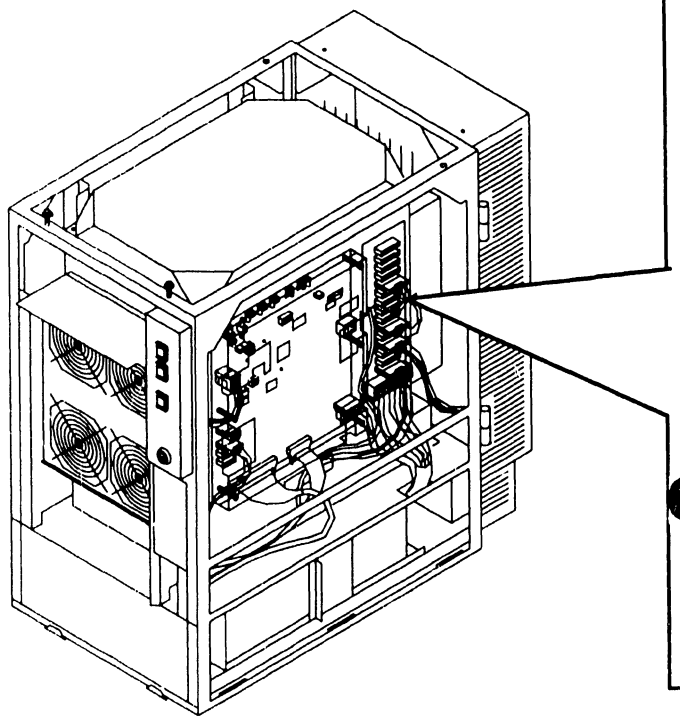

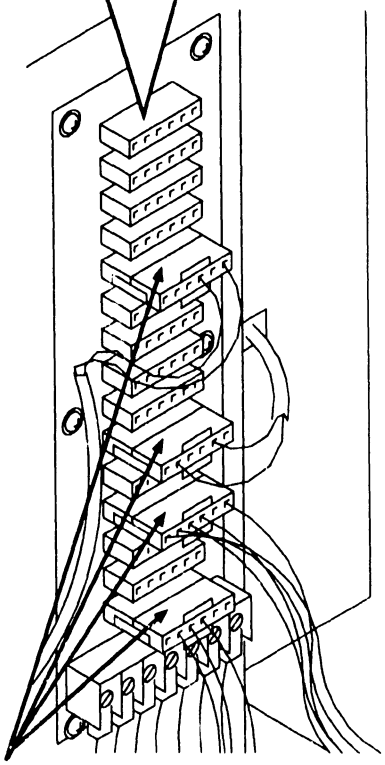

5. Remove all cables from DC PDU connectors (i.e. front fan assembly cable, rear fan assembly cable, option half-panel cables).

➡NEXT

7.2.20 DC Power Distribution Unit (DC PDU) Removal (Sheet 2 of 3)

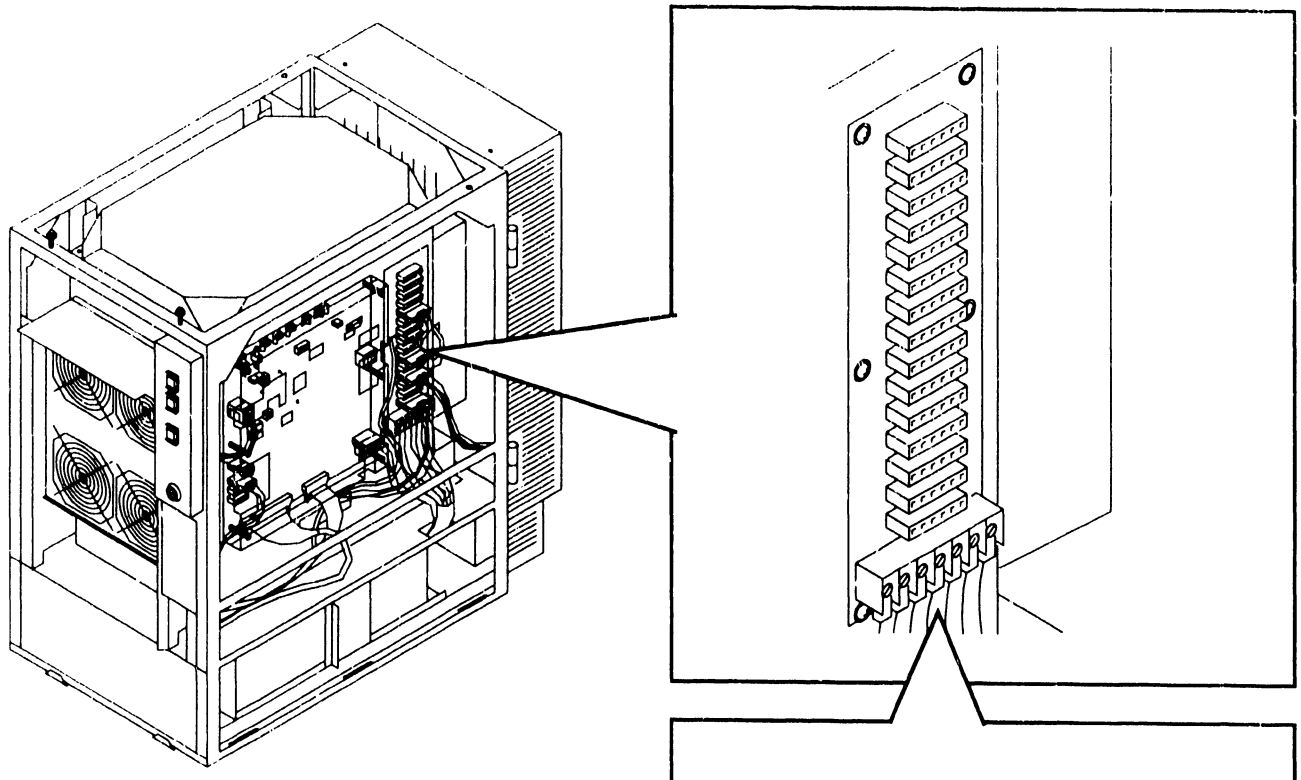

6 Note wire locations and color code and remove DC Power harness assembly from DC PDU 7-connector terminal block.

➡NEXT

7.2.20 DC Power Distribution Unit (DC PDU) Removal (Sheet 3 of 3)

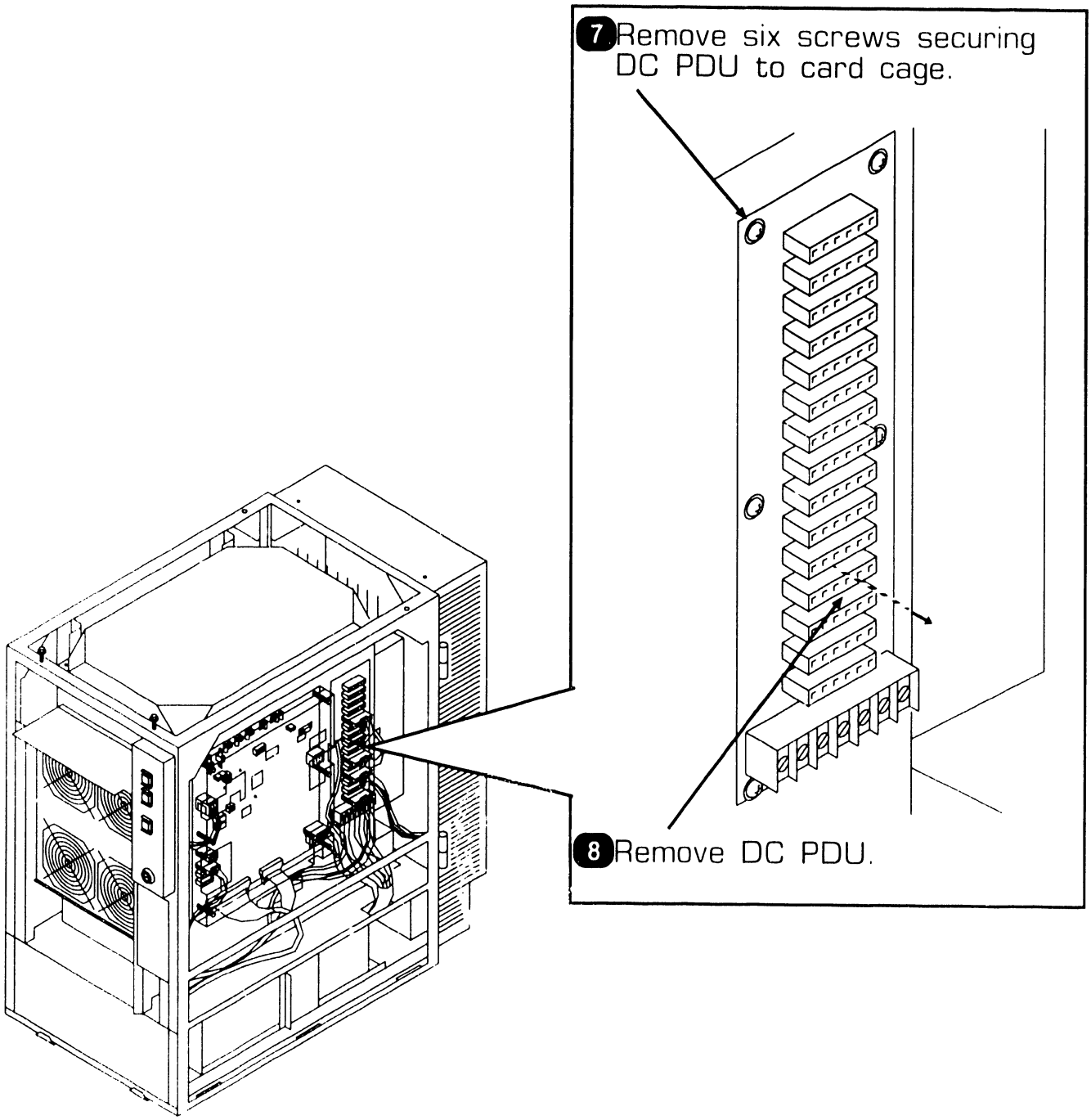

● END

7.2 Mainframe Removal Procedures

7.2.21 Front Fan Housing Removal (Sheet 1 of 3)

1. Power off mainframe and disconnect ac power. (➡4.2)
2. Remove top cover. (➡7.2.1)
3. Remove front cover. (➡7.2.2)
4. Remove right side cover. (➡7.2.3)

NOTE

Front fan housing fan cable can be installed in any available connector located on the DC PDU.

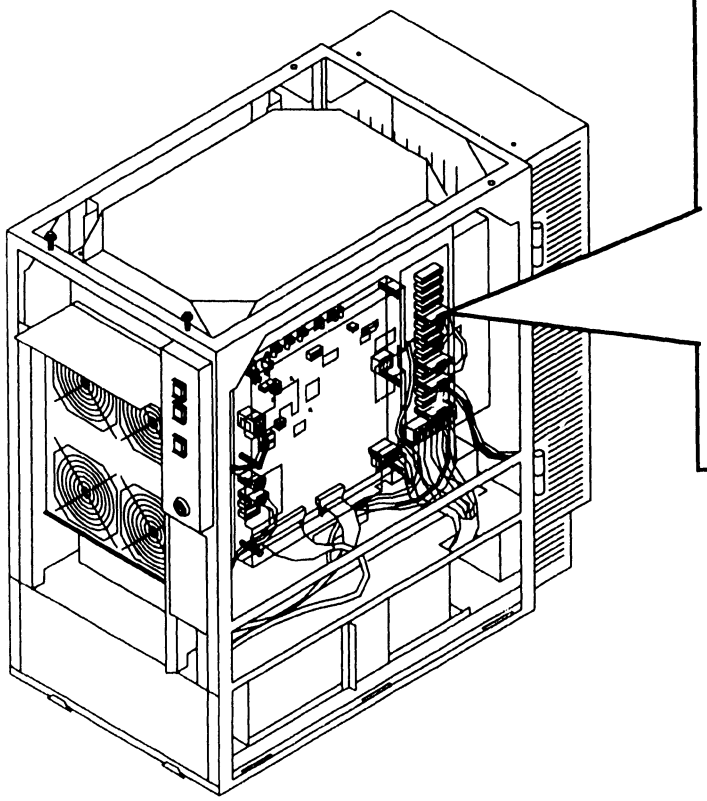

5. Remove front fan housing cable from DC PDU connector.

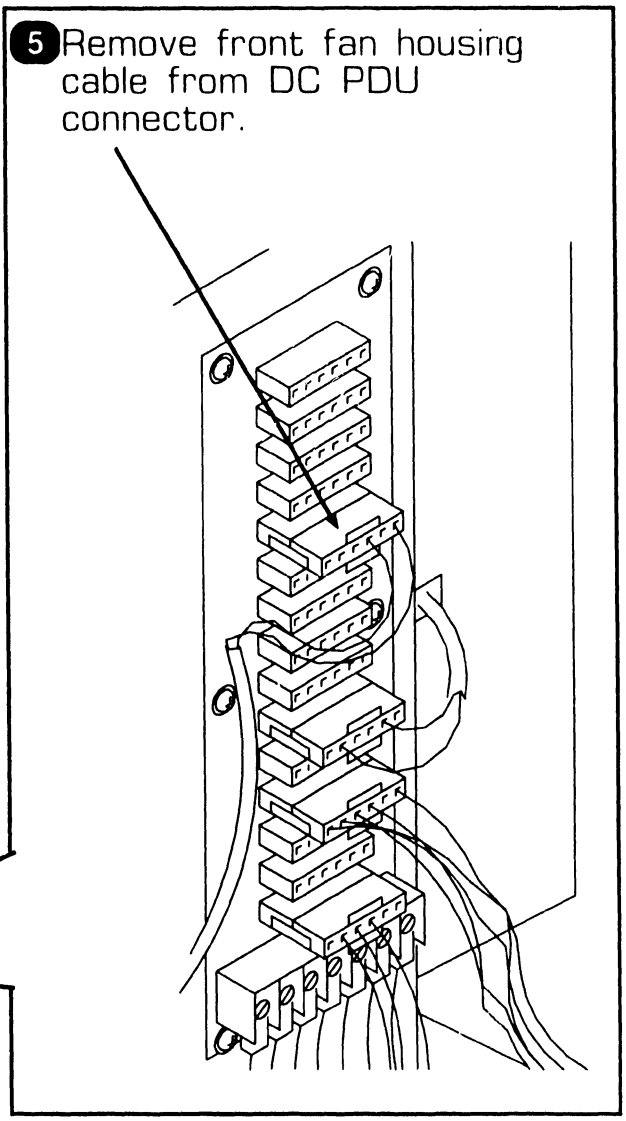

➡NEXT

7.2.21 Front Fan Housing Removal (Sheet 2 of 3)

6 Remove four nuts securing front fan housing to card cage.

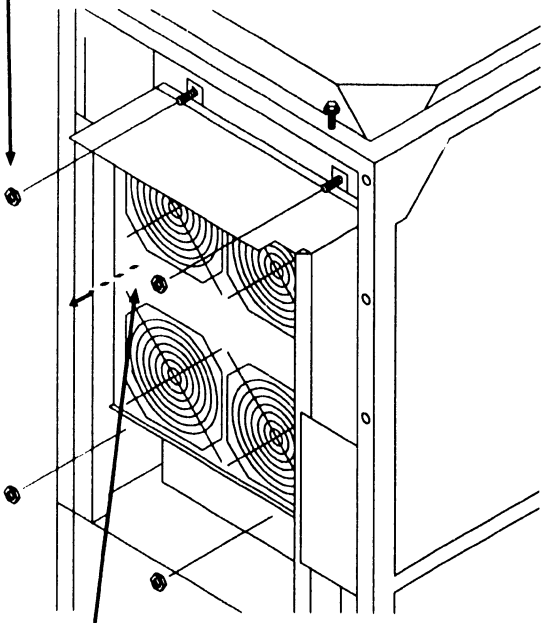

7 Remove front fan housing and fans from chassis.

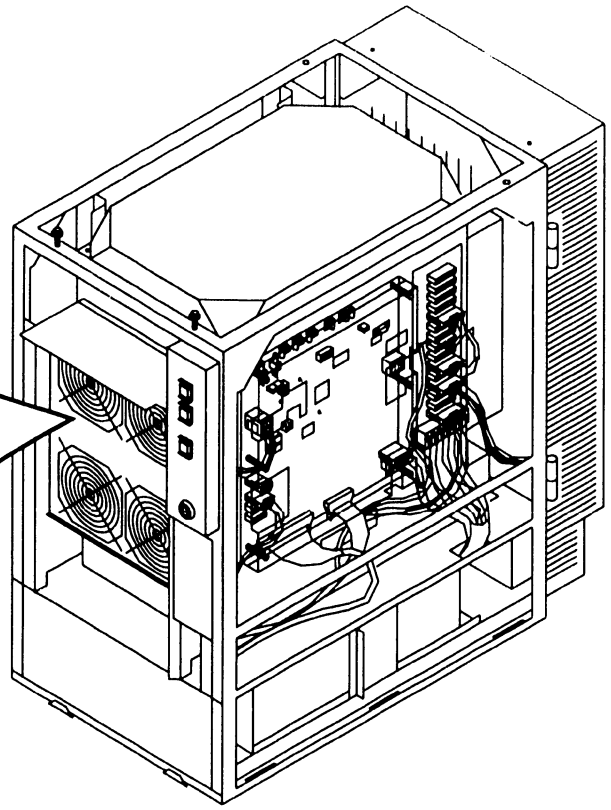

➡NEXT

7.2.21 Front Fan Housing Removal (Sheet 3 of 3)

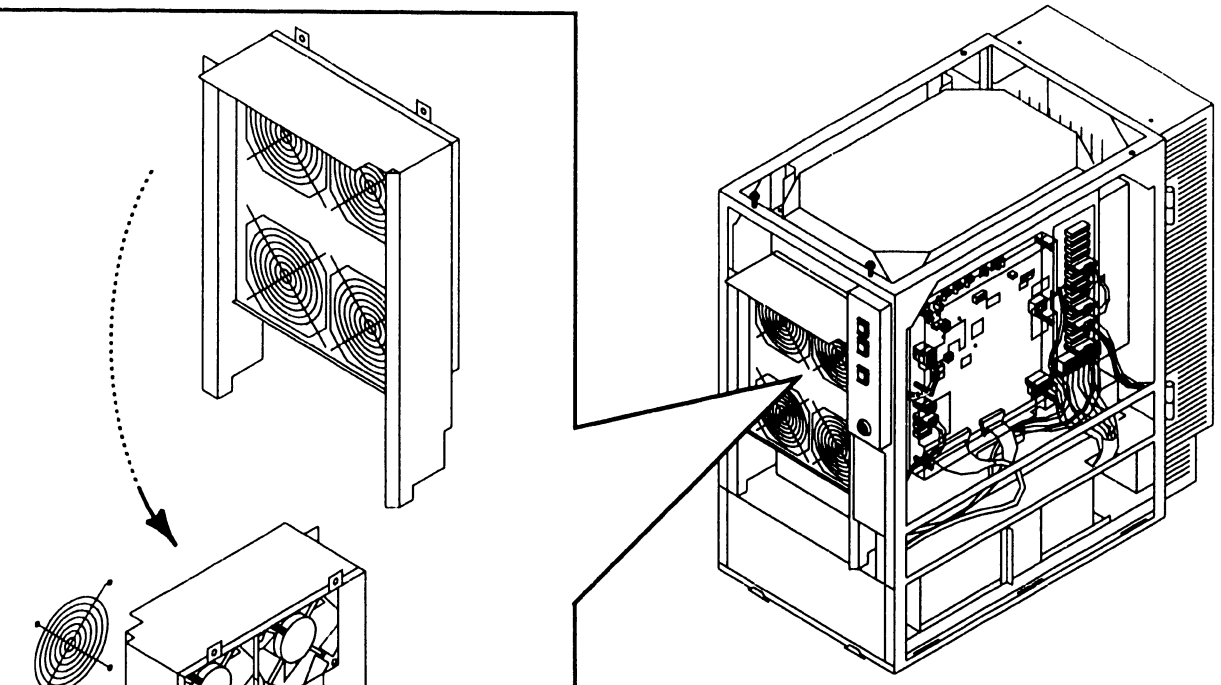

8 Remove four screws and nuts securing defective fan to front fan housing.

9 Disconnect defective fan leads from front fan housing terminal block.

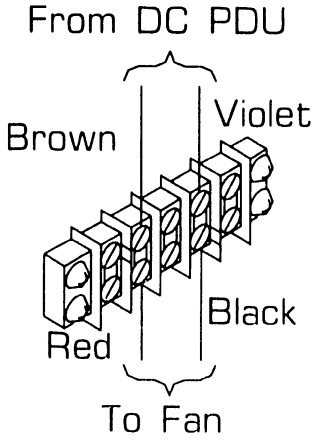

NOTE

Fan leads must be connected as shown to ensure correct fan airflow direction.

● END

7.2 Mainframe Removal Procedures

7.2.22 Rear Fan Housing Removal (Sheet 1 of 3)

1. Power off mainframe and disconnect ac power. (➡4.2)
2. Remove top cover. (➡7.2.1)
3. Remove front cover. (➡7.2.2)
4. Remove right side cover. (➡7.2.3)

NOTE

Rear fan housing fan cable can be installed in any available connector located on the DC PDU.

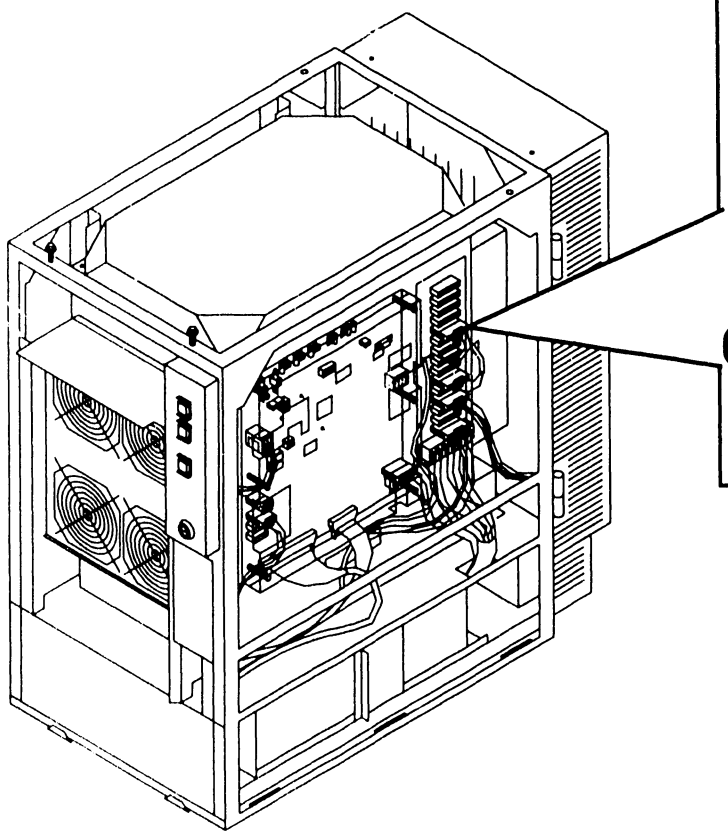

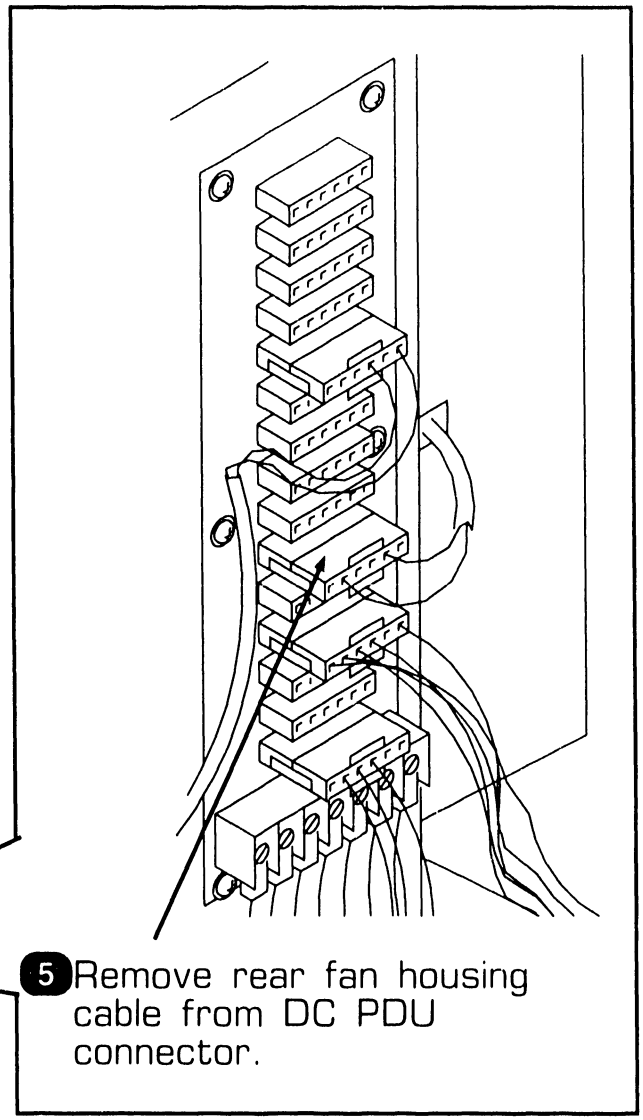

5. Remove rear fan housing cable from DC PDU connector.

➡NEXT

7.2.22 Rear Fan Housing Removal (Sheet 2 of 3)

6 Open bulkhead door. (➡7.2.28)

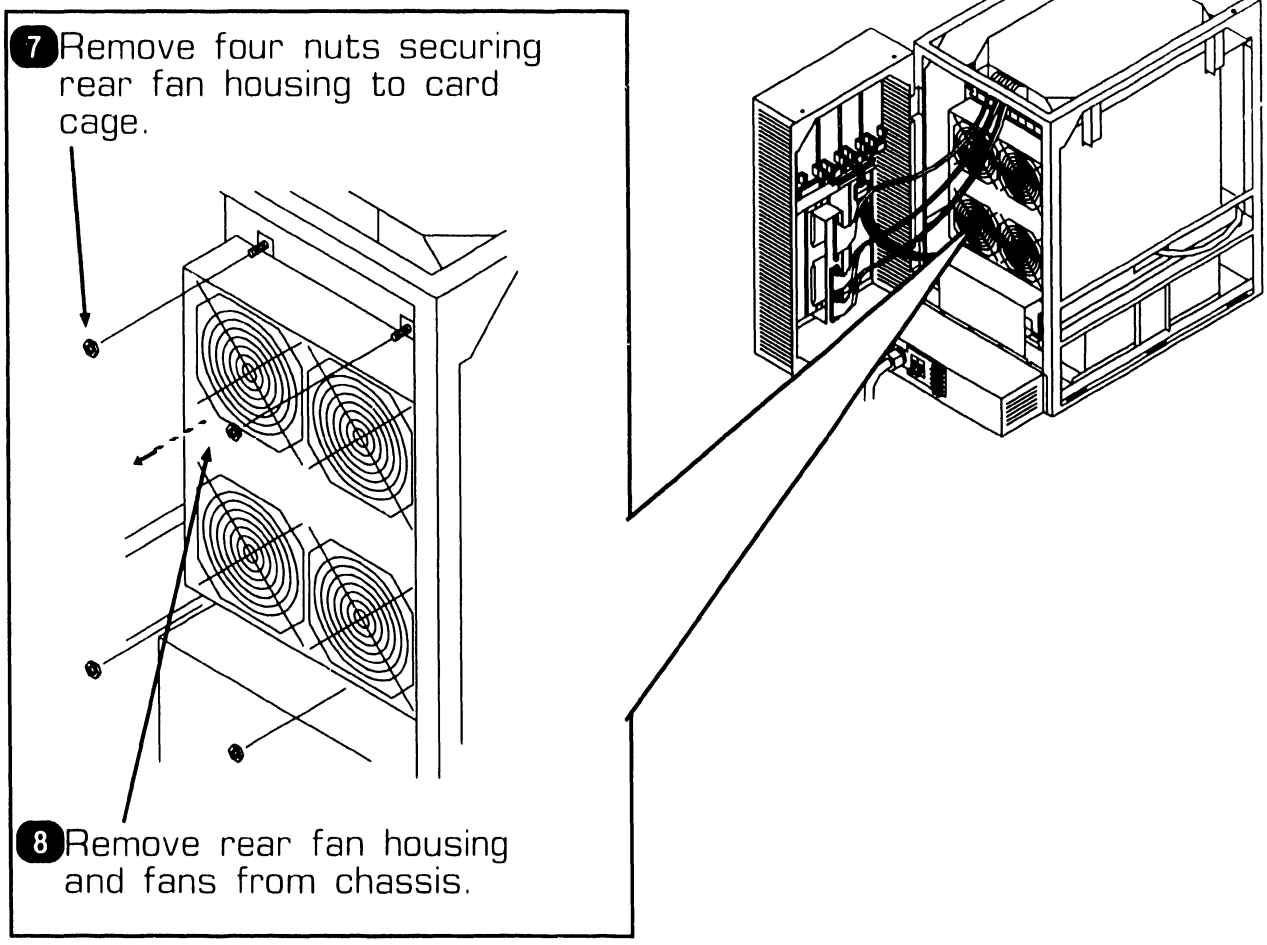

➡NEXT

7.2.22 Rear Fan Housing Removal (Sheet 3 of 3)

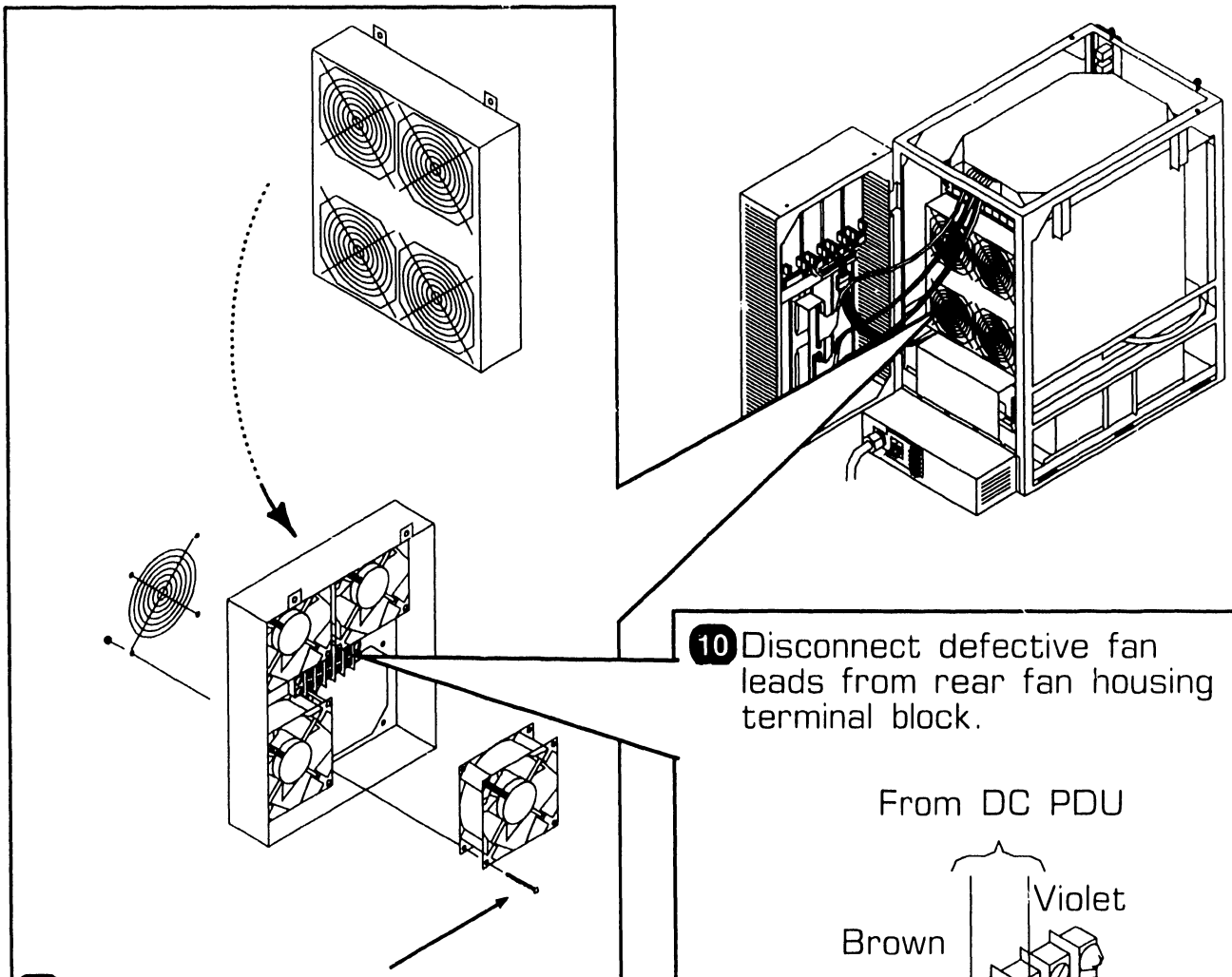

9 Remove four screws and nuts securing defective fan to rear fan housing.

10 Disconnect defective fan leads from rear fan housing terminal block.

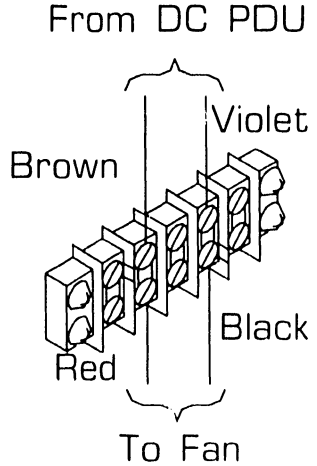

NOTE

Fan leads must be connected as shown to ensure correct fan airflow direction.

● END

7.2.23 AC Power Distribution Unit (AC PDU) Removal (Sheet 1 of 2)

1. Power off mainframe and disconnect ac power. (➡4.2)
2. Remove top cover. (➡7.2.1)
3. Open rear door. (➡7.2.28)
4. Remove seven screws securing AC Power Distribution Unit to chassis.

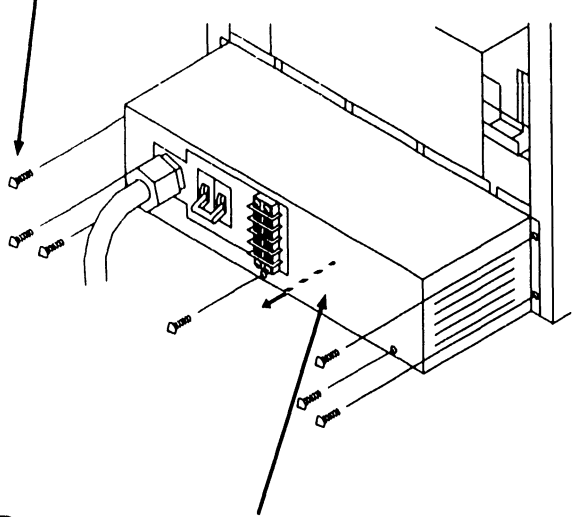

5. Slide AC PDU out of chassis about 3 inches.

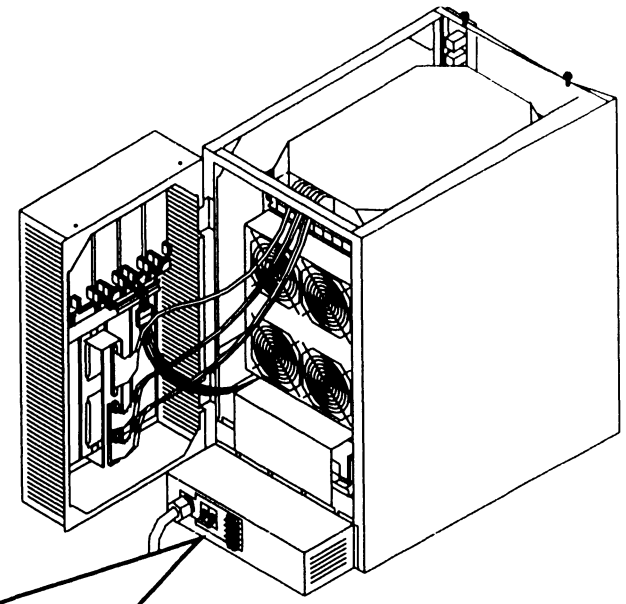

➡NEXT

7.2.23 AC Power Distribution Unit (AC PDU) Removal (Sheet 2 of 2)

NOTE

AC PDU connectors J1 - J5 are parallel. AC PDU power cables can be installed in any available connector location.

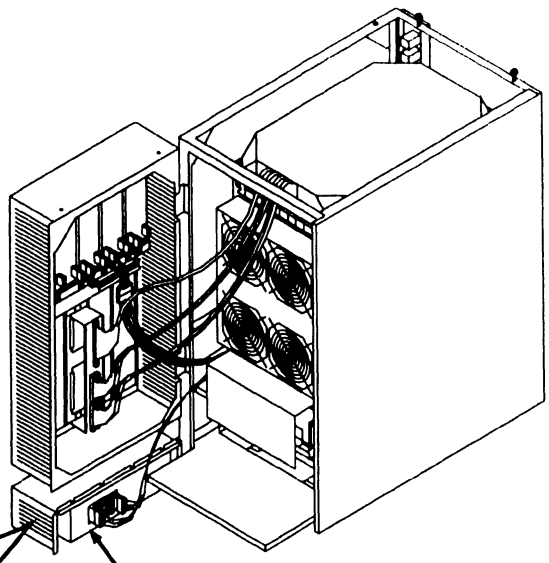

6 Note cable positions and disconnect cables from AC PDU connectors.

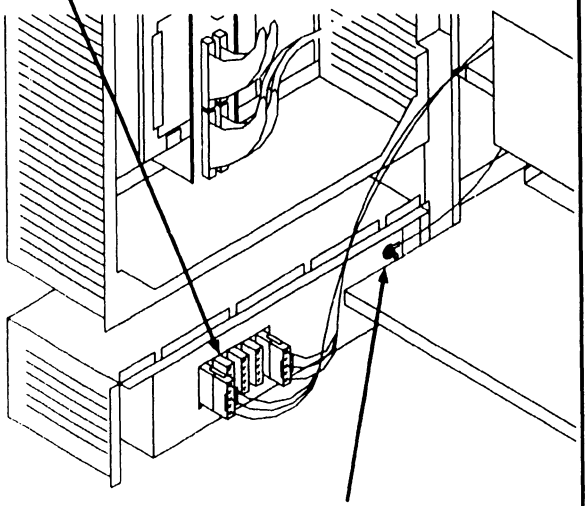

7 Remove nut securing chassis ground lead to AC PDU and remove ground.

8 Remove AC PDU.

● END

7.2 Mainframe Removal Procedures

7.2.24 Multioutput Power Supply Removal (Sheet 1 of 5)

1. Power off mainframe and disconnect ac power. (➡4.2)

WARNING

DO NOT OPEN THE SWITCHING POWER SUPPLY UNDER ANY CIRCUMSTANCE. EXTREMELY DANGEROUS VOLTAGE AND CURRENT LEVELS, IN EXCESS OF 300 VOLTS DC AND UNLIMITED CURRENT, ARE PRESENT WITHIN THE POWER SUPPLY.

DO NOT ATTEMPT TO REPAIR THE POWER SUPPLY; IT IS FIELD REPLACEABLE ONLY.

AFTER POWERING THE UNIT DOWN AND DISCONNECTING THE AC POWER PLUG FROM THE WALL OUTLET, ALLOW ONE MINUTE BEFORE REMOVING THE POWER SUPPLY TO PROVIDE ADEQUATE TIME FOR ANY RESIDUAL VOLTAGE TO DRAIN THROUGH THE BLEEDER RESISTORS.

2. Remove top cover. (➡7.2.1)

3. Remove front cover. (➡7.2.2)

4. Remove right side cover. (➡7.2.3)

5. Open bulkhead door. (➡7.2.28)

6. Remove AC PDU (➡7.2.23)

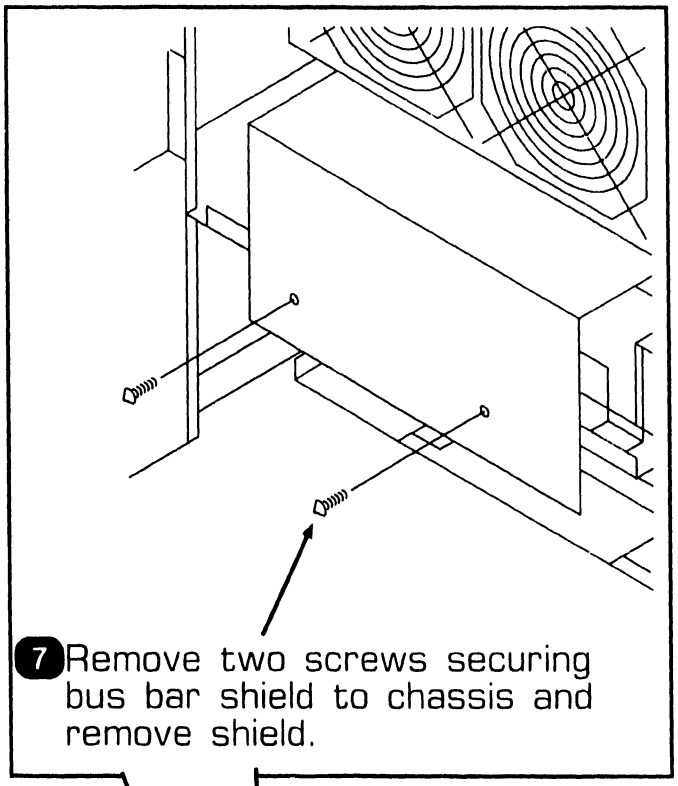

7. Remove two screws securing bus bar shield to chassis and remove shield.

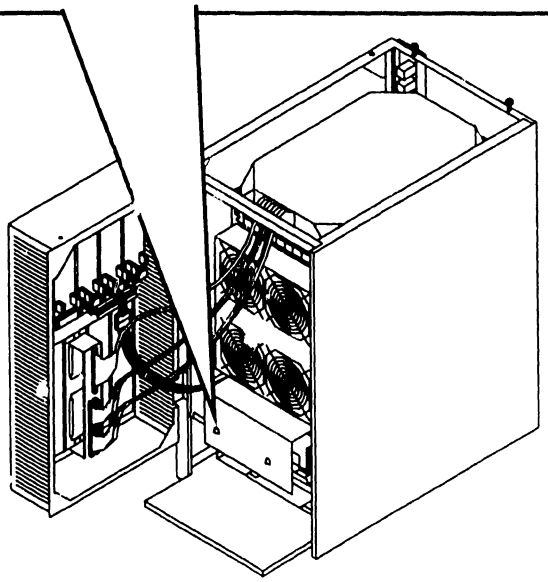

➡NEXT

7.2 Mainframe Removal Procedures

7.2.24 Multioutput Power Supply Removal (Sheet 2 of 5)

8 Disconnect power supply 4-pin cable from power controller board connector J3. (➡7.2.19, step 5)

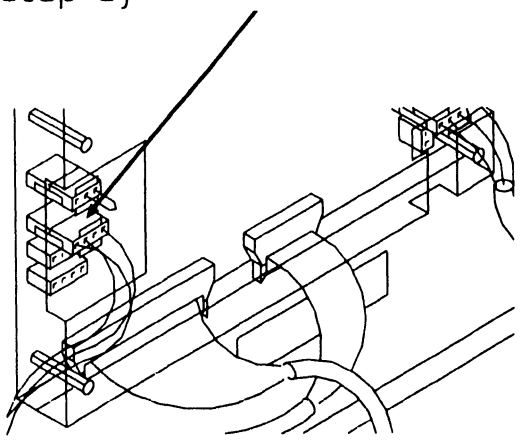

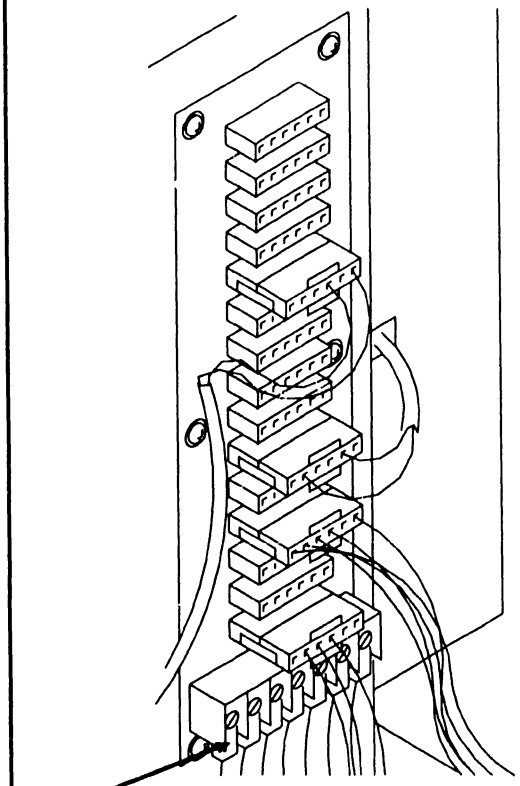

9 Note wire locations and color code and remove DC Power harness assembly from DC PDU 7-connector terminal block. (➡7.2.20, step 6)

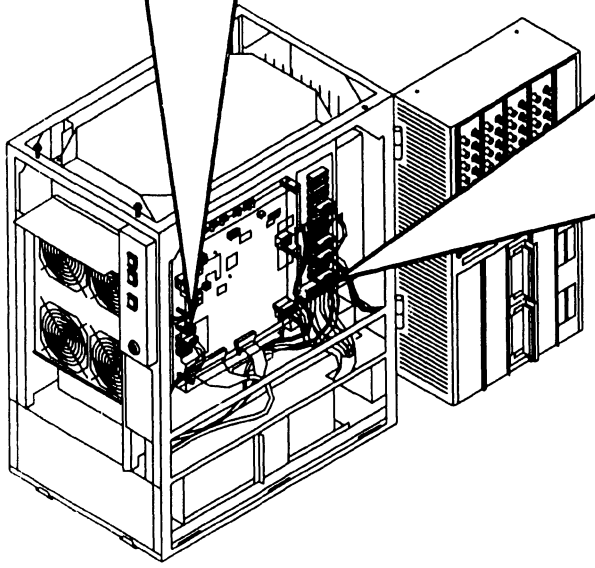

10 Cut tie wraps securing cables to chassis.

➡NEXT

7.2.24 Multioutput Power Supply Removal (Sheet 3 of 5)

11 Disconnect AC cable from AC PDU connector. (➡7.2.23, step 6)

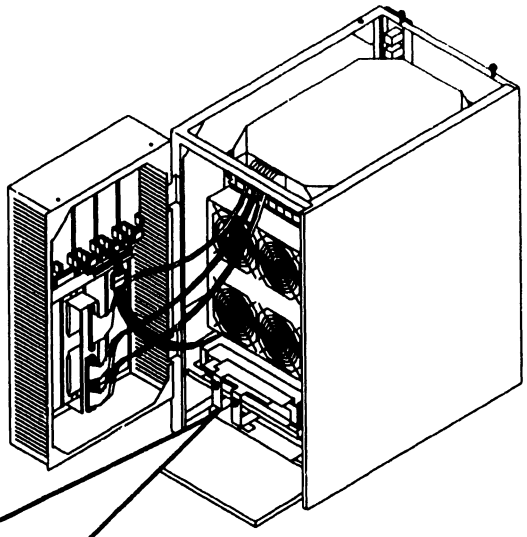

12 Remove screw from lower half of positive (+5V) bus bar.

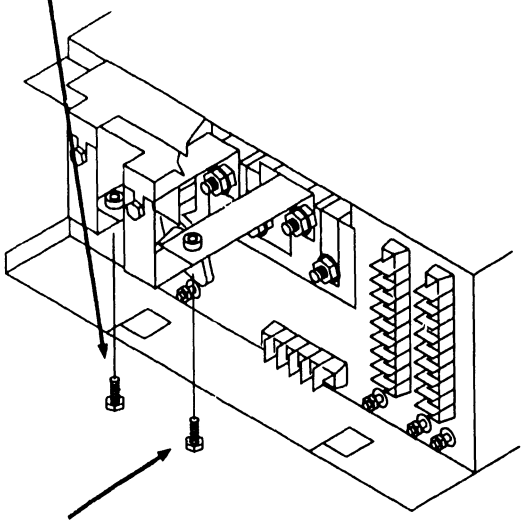

13 Remove screw from lower half of ground (±0V) bus bar.

➡NEXT

7.2.24 Multioutput Power Supply Removal (Sheet 4 of 5)

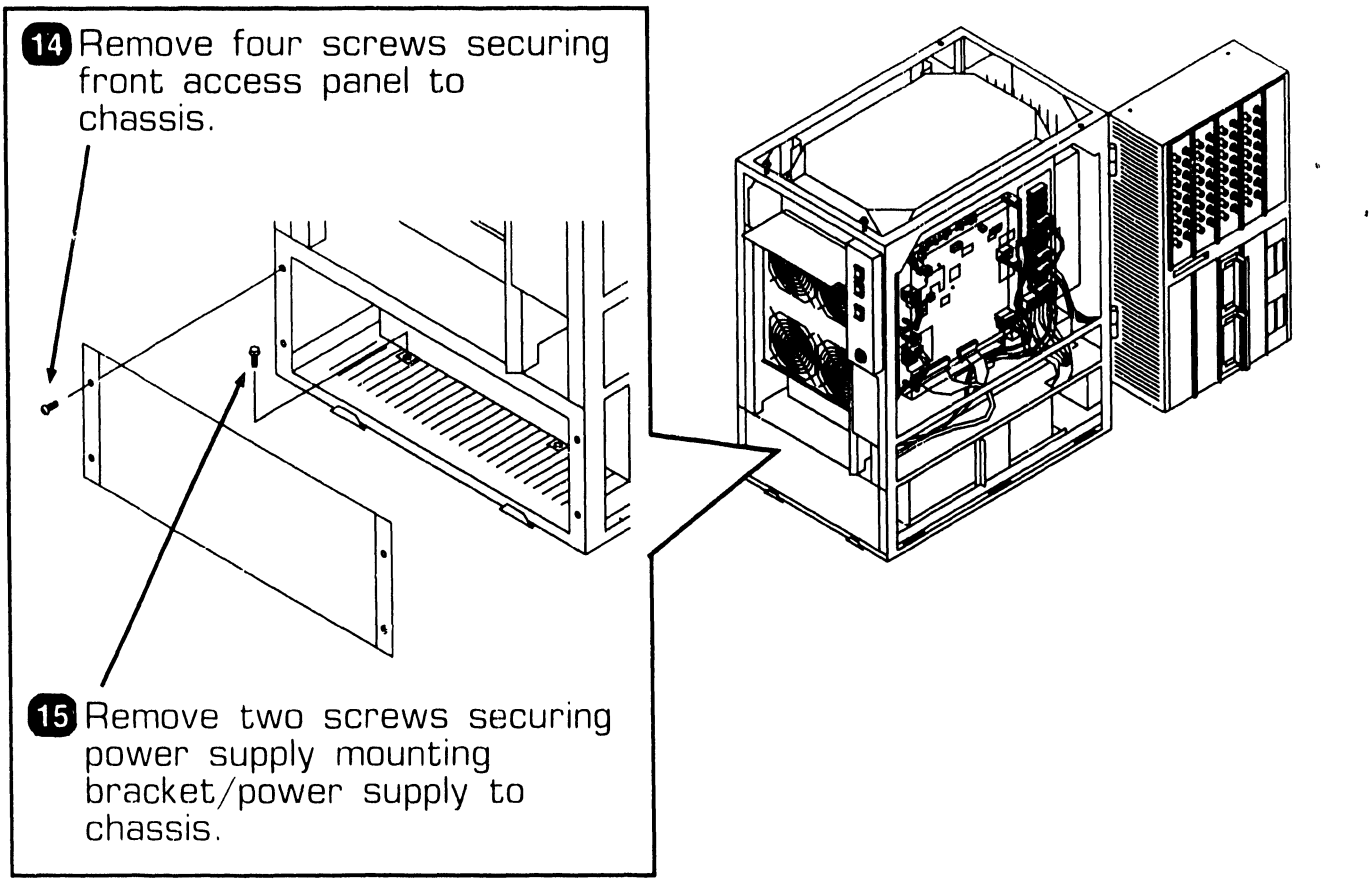

➡NEXT

7.2 Mainframe Removal Procedures

7.2.24 Multioutput Power Supply Removal (Sheet 5 of 5)

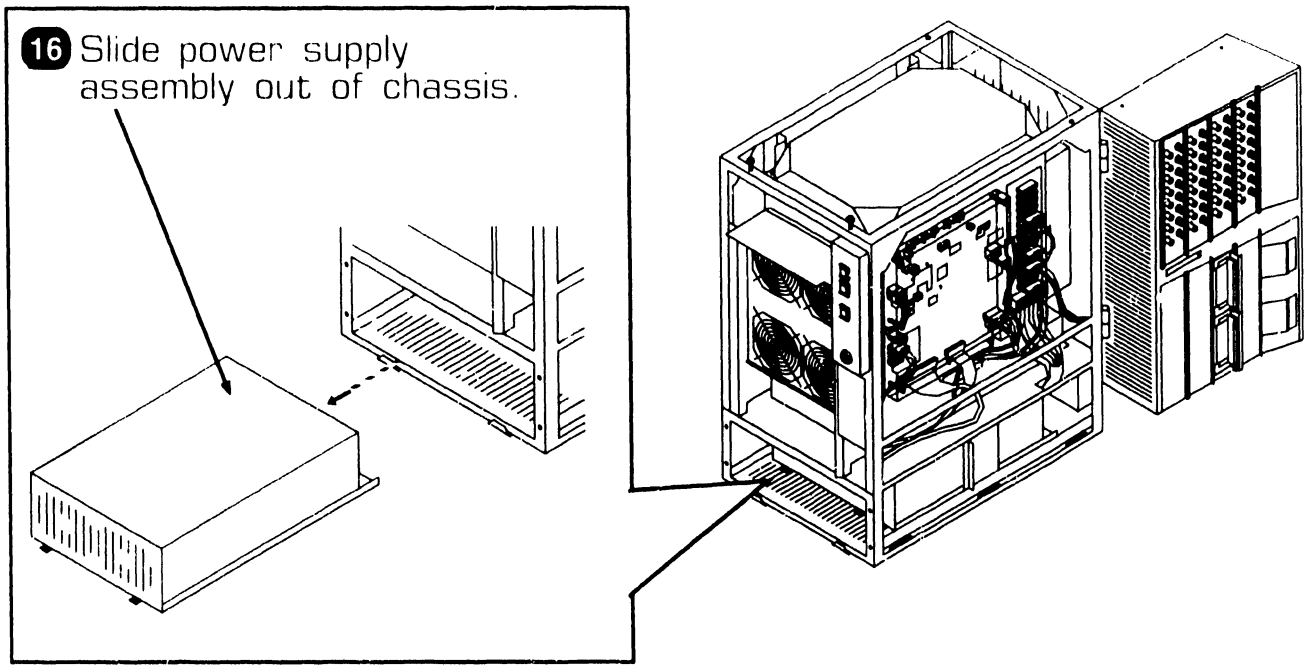

NOTE

Multioutput power supply assembly 270-1100 is the field replaceable unit. This assembly consists of the following components:

- 725-3308-1 Multioutput Power Supply
- 270-3450 DC Power Harness
- 220-2643 Cable, Controller Board
- 220-2296 Cable, AC PDU to PS
- 458-1991 Bus Bar, Lower Positive
- 458-1992 Bus Bar, Lower Ground
- 451-5593 Bracket, PS Mounting

● END

7.2 Mainframe Removal Procedures

7.2.25 Control Panel Removal (Sheet 1 of 2)

1. Power off mainframe and disconnect ac power. (➡4.2)
2. Remove top cover. (➡7.2.1)
3. Remove front cover. (➡7.2.2)
4. Remove right side cover. (➡7.2.3)

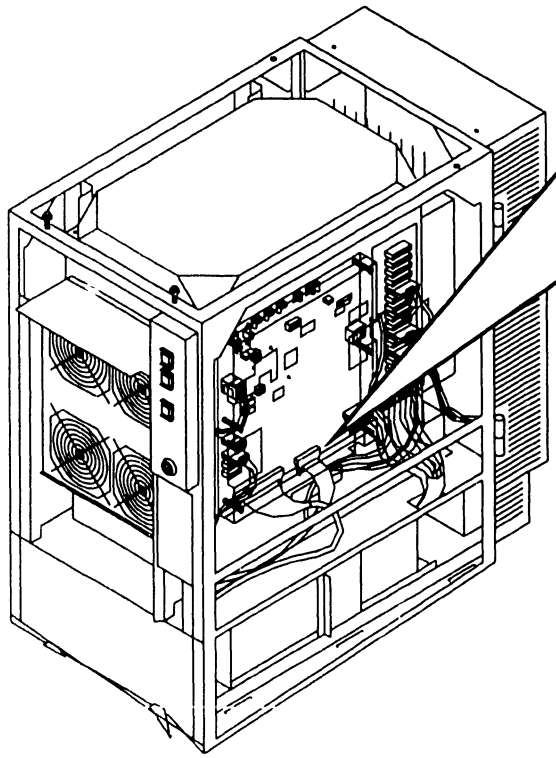

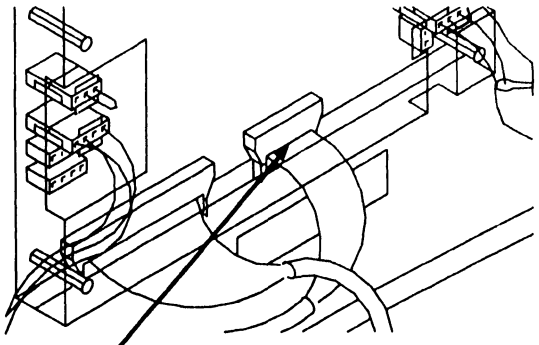

5. Disconnect control panel cable from power supply controller board connector J7.

6. Cut tie wraps securing cable to chassis.

➡NEXT

7.2 Mainframe Removal Procedures

7.2.25 Control Panel Removal (Sheet 2 of 2)

NOTE

Control Panel assembly 270-1099 is the field replaceable unit. This assembly contains the following components:

- 220-3538 Cable, control panel
- 325-1037 Keylock, rotary 4-position
- 325-2261 Pushbutton switch, red lens
- 325-2262 Pushbutton switch, green lens
- 325-2264 Pushbutton switch, yellow lens

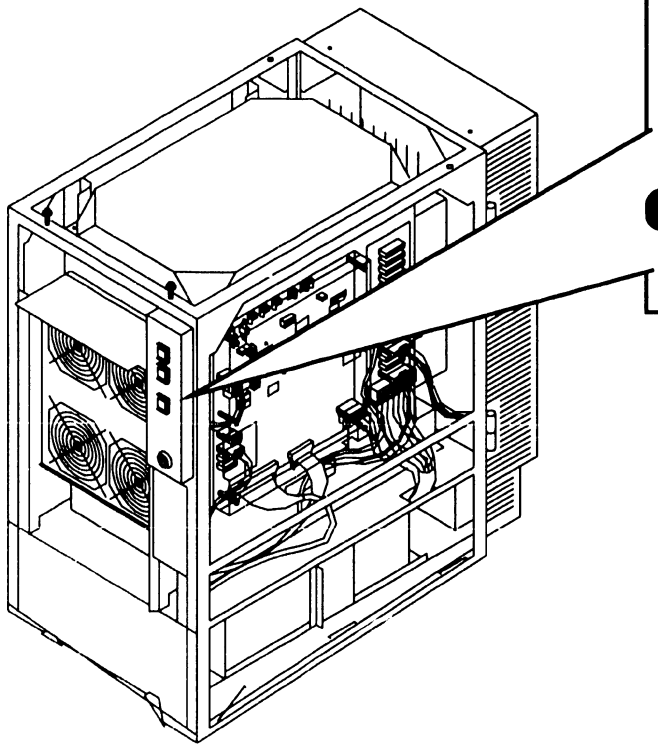

7 Remove three screws securing control panel assembly to chassis.

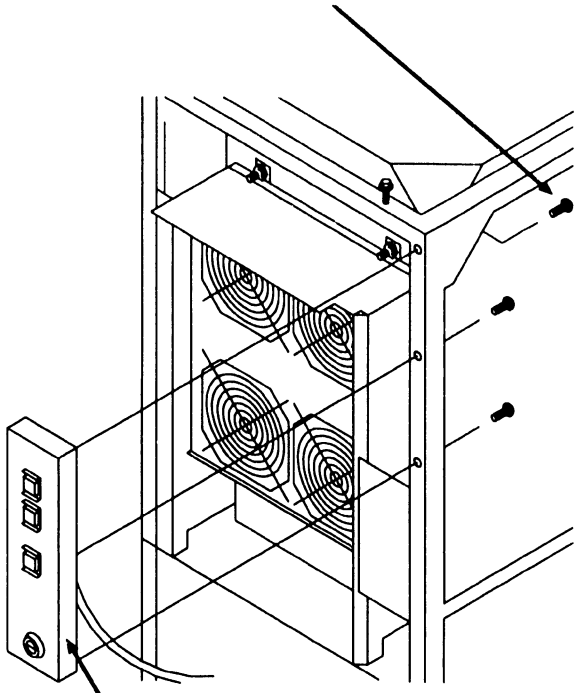

8 Remove control panel assembly from chassis.

● END

7.2 Mainframe Removal Procedures

7.2.26 Lighted Pushbutton Switch Lamp Removal

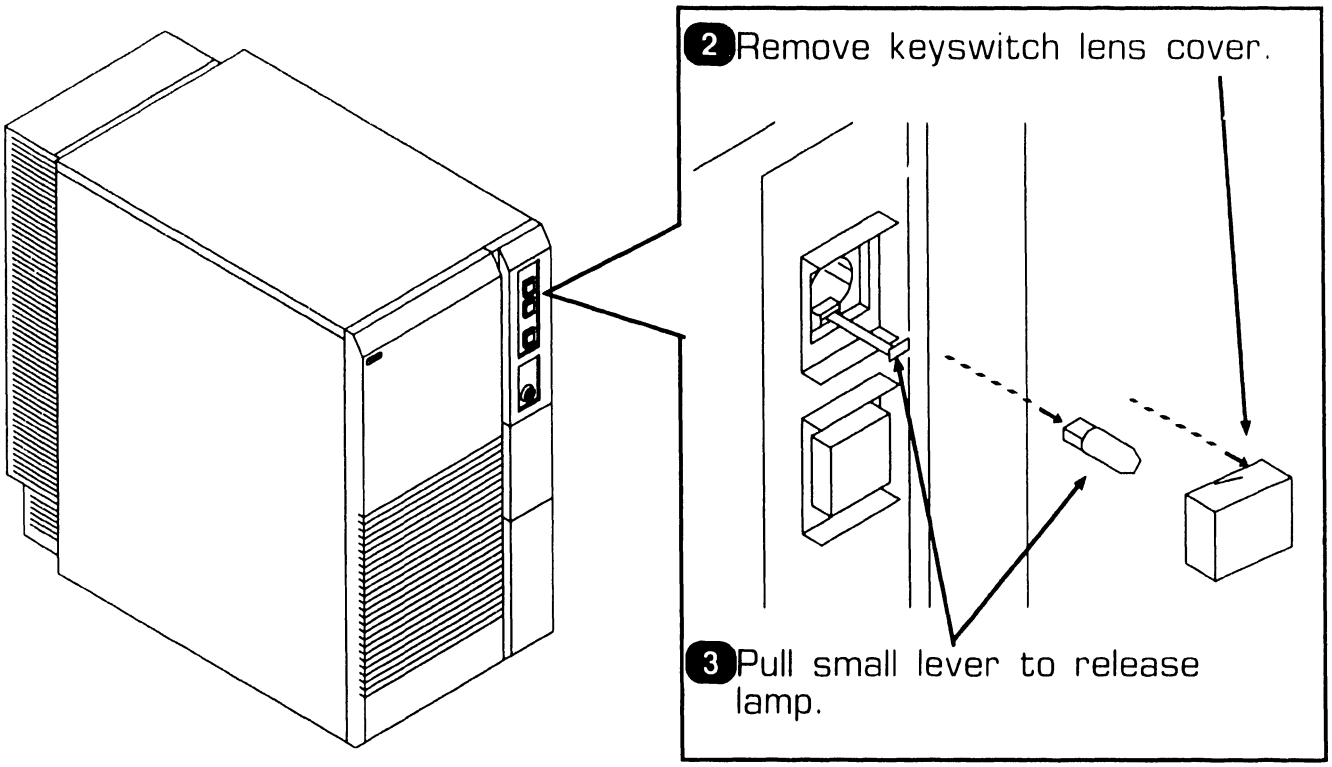

1 Power off mainframe and disconnect ac power. (➡4.2)

NOTE

Pushbutton switch ON and pushbutton switch OFF have lamps installed. Pushbutton switch 'Reset' does not have a lamp. (➡3.2.1)

● END

7.2 Mainframe Removal Procedures

7.2.27 Card Cage Removal (Sheet 1 of 5)

1. Power off mainframe and disconnect ac power. (➡4.2)
2. Remove top cover. (➡7.2.1)
3. Remove front cover. (➡7.2.2)
4. Remove right and left side covers. (➡7.2.3)
5. Remove card cage cover. (➡7.2.4)
6. Remove PCBs from backplane. (➡7.2.5)
7. Remove power supply controller. (➡7.2.19)
8. Remove DC PDU. (➡7.2.20)
9. Remove control panel assembly. (➡7.2.25)

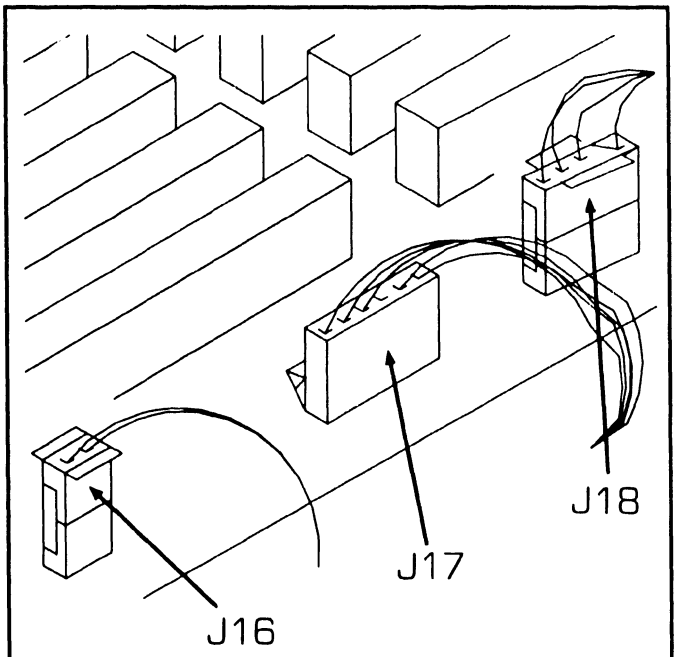

10. Note cable position and remove 2-pin cable from backplane connector J16, 8-pin cable from backplane connector J17, and 4-pin cable from backplane connector J18.

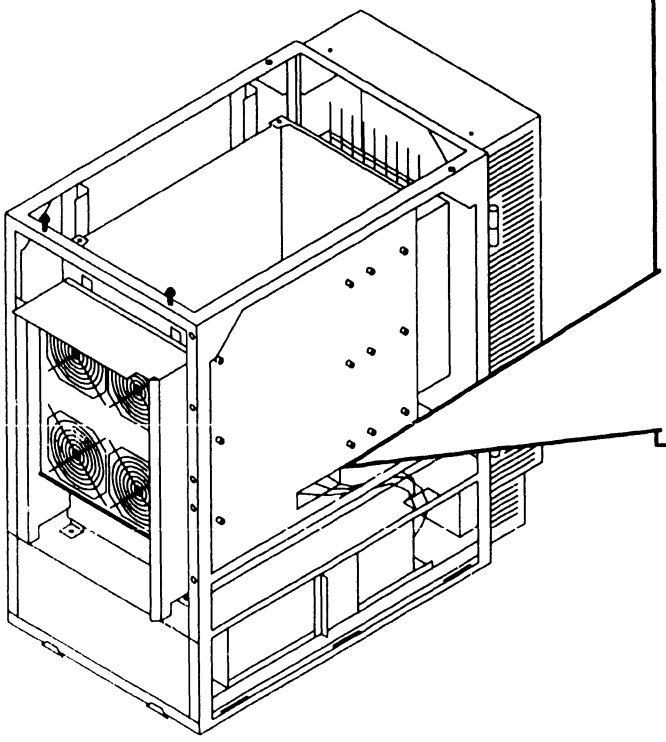

➡NEXT

7.2 Mainframe Removal Procedures

7.2.27 Card Cage Removal (Sheet 2 of 5)

11 Remove bus bar shield. (➡7.2.24)

12 Remove screw from upper half of positive (+5V) bus bar.

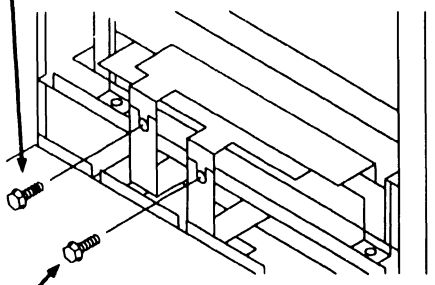

13 Remove screw from upper half of ground (±0V) bus bar.

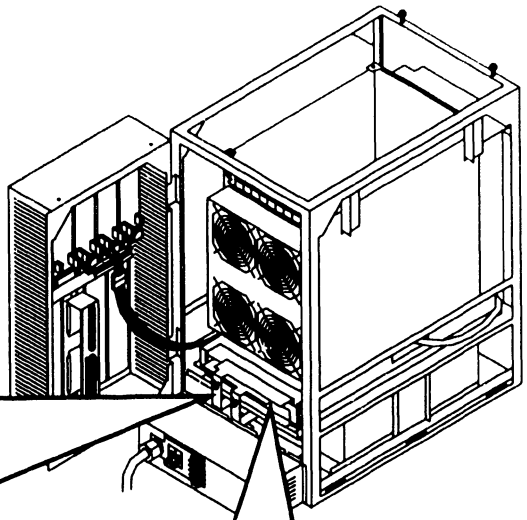

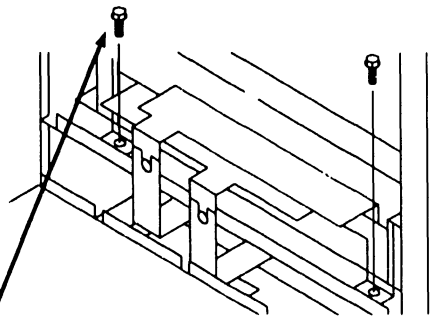

14 Remove two screws securing rear of card cage to chassis.

➡NEXT

7.2 Mainframe Removal Procedures

7.2.27 Card Cage Removal (Sheet 3 of 5)

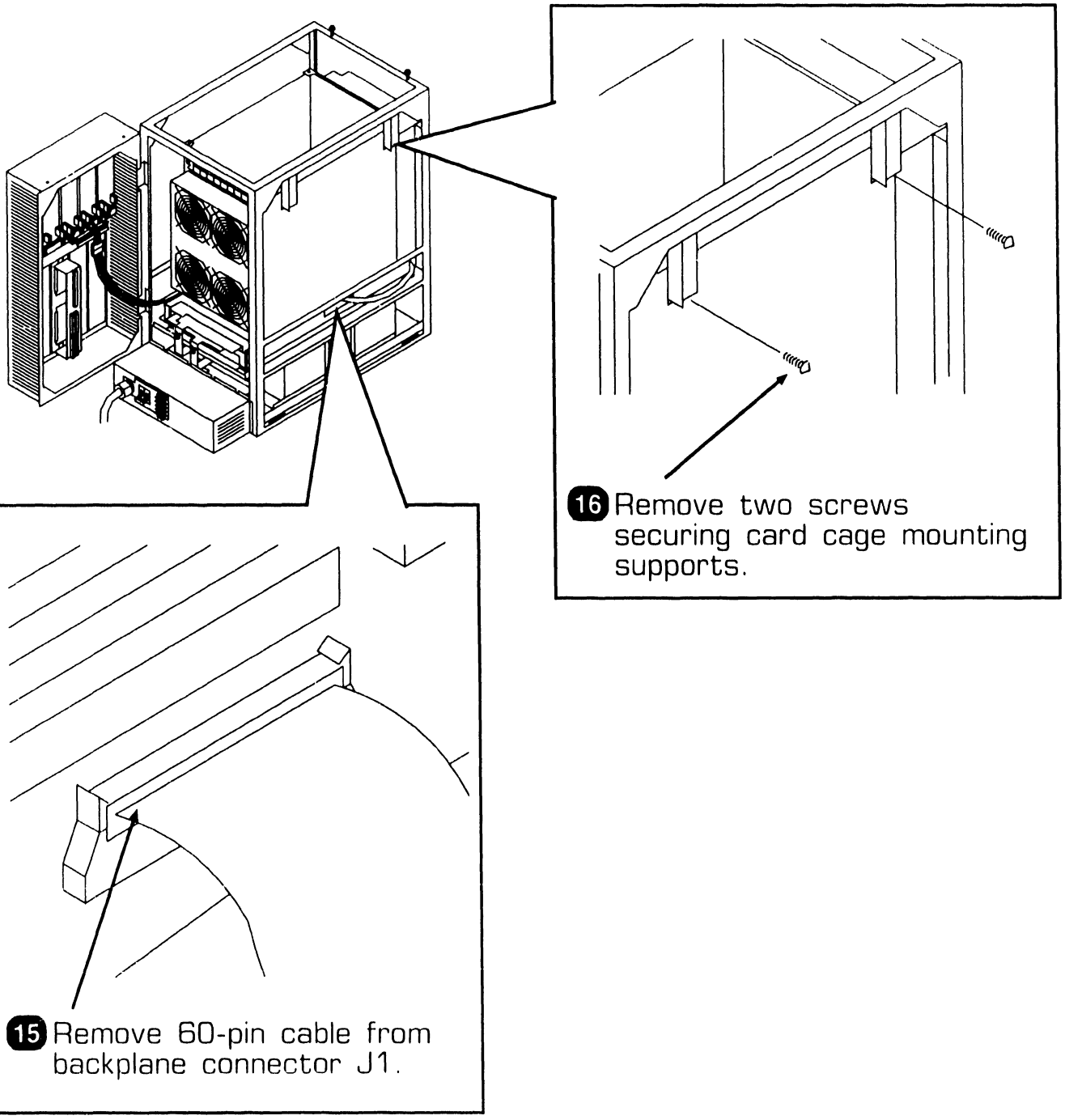

16 Remove two screws securing card cage mounting supports.

15 Remove 60-pin cable from backplane connector J1.

➡NEXT

7.2 Mainframe Removal Procedures

7.2.27 Card Cage Removal (Sheet 4 of 5)

17 Remove two screws securing front of card cage to chassis.

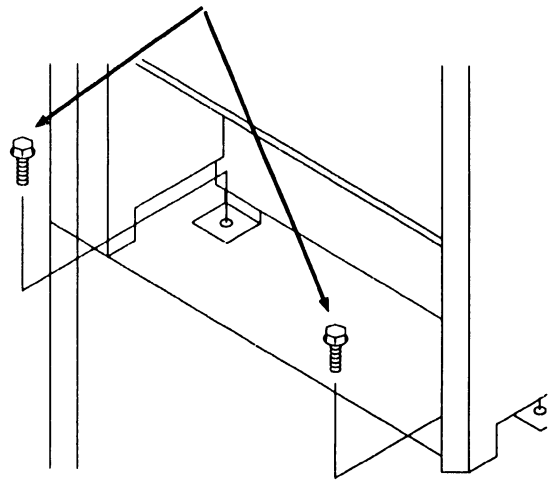

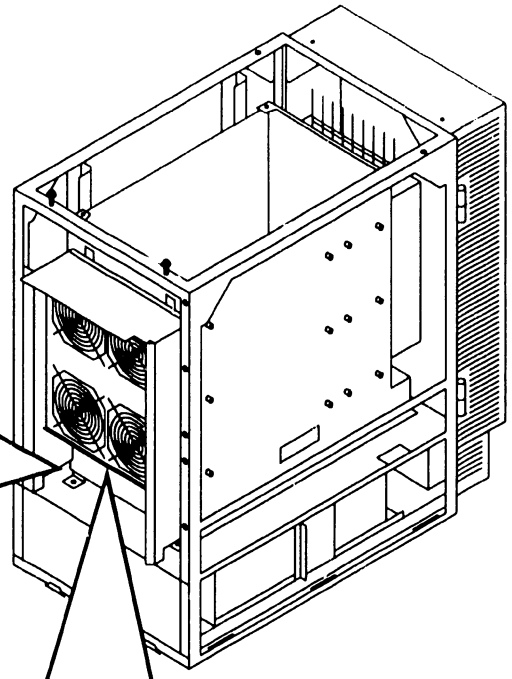

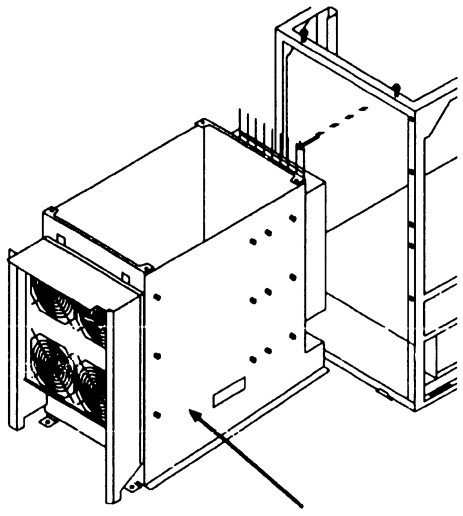

18 Slide card cage out of chassis.

➡NEXT

7.2 Mainframe Removal Procedures

7.2.27 Card Cage Removal (Sheet 5 of 5)

19 Remove 5 screws from each side securing base plate/ backplane to card cage.

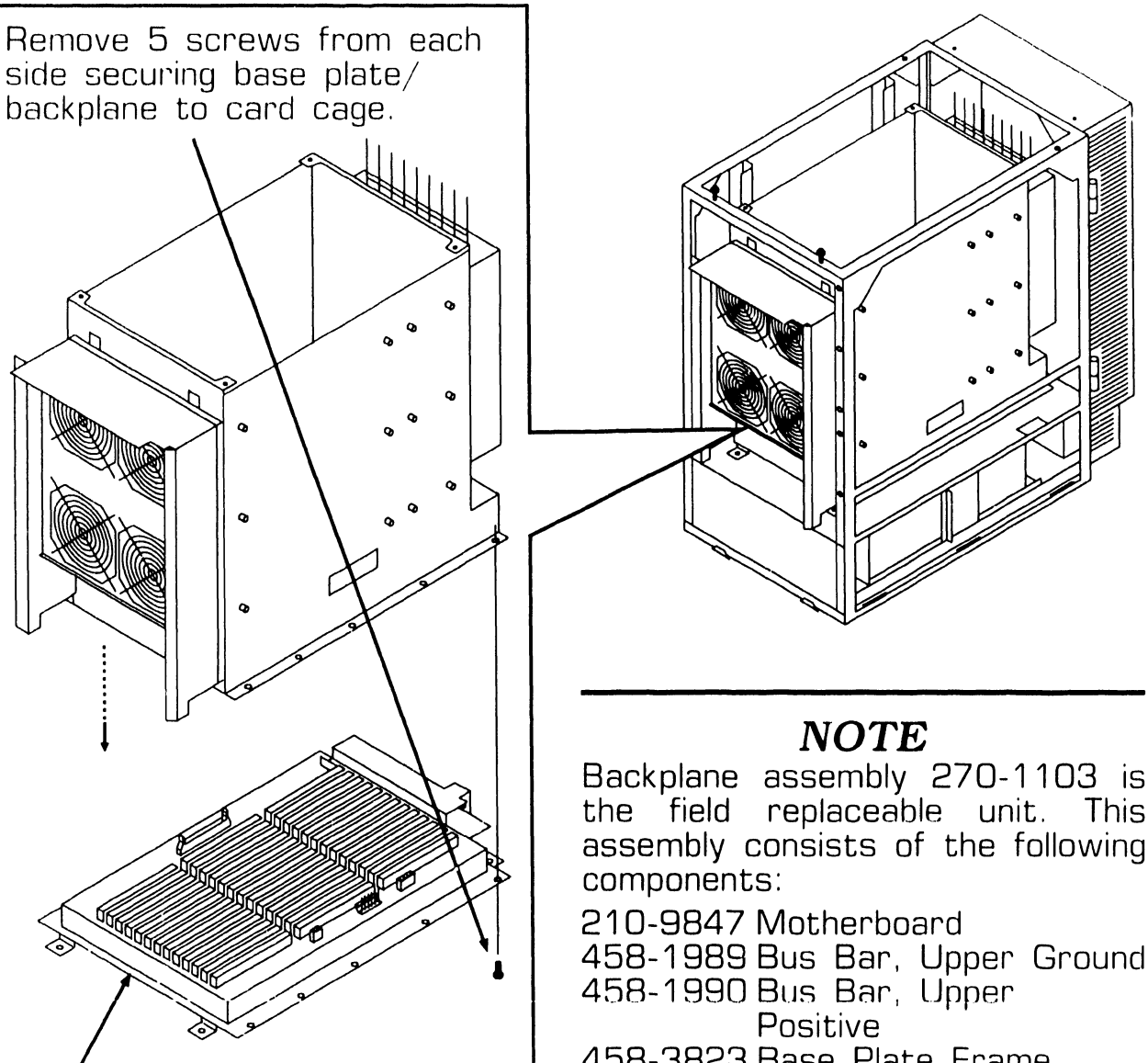

20 Remove base plate/backplane from card cage.

NOTE

Backplane assembly 270-1103 is the field replaceable unit. This assembly consists of the following components:

210-9847 Motherboard
458-1989 Bus Bar, Upper Ground
458-1990 Bus Bar, Upper Positive
458-3823 Base Plate Frame

● END

7.2 Mainframe Removal Procedures

7.2.28 General Rear Door I/O Panel Removal (Sheet 1 of 2)

NOTE

General rear door I/O panel removal procedures are procedures common to all I/O panels installed on the rear door. Procedures specific to I/O panels are found under the associated I/O panel heading.

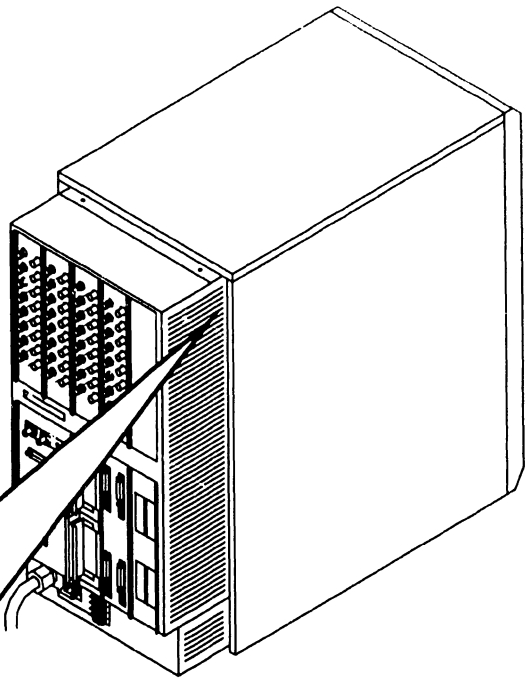

1. Power off mainframe and disconnect ac power. (➡4.2)
2. Remove top cover. (➡7.2.1)
3. Loosen three captive screws securing rear door to cabinet.

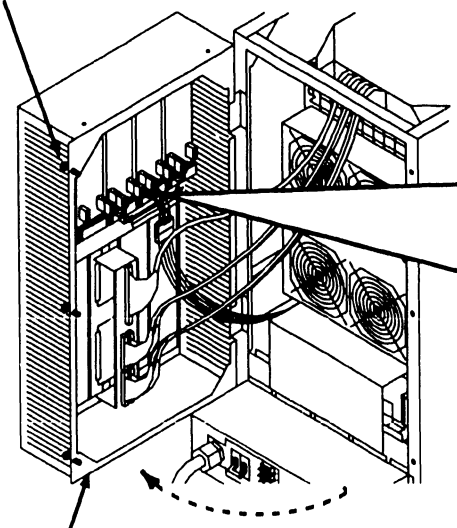

4. Swing door open to right.

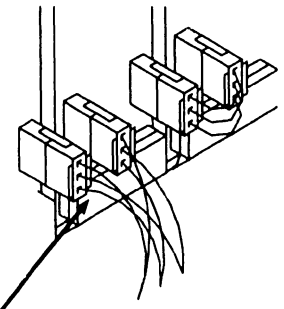

5. Note cable routing and location and remove cables from I/O panel connectors.

➡NEXT

7.2.28 General Rear Door I/O Panel Removal (Sheet 2 of 2)

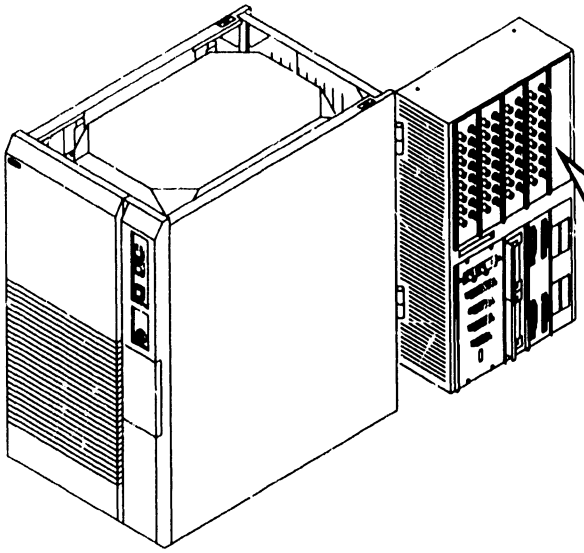

7 Remove screws securing I/O panel to be removed.

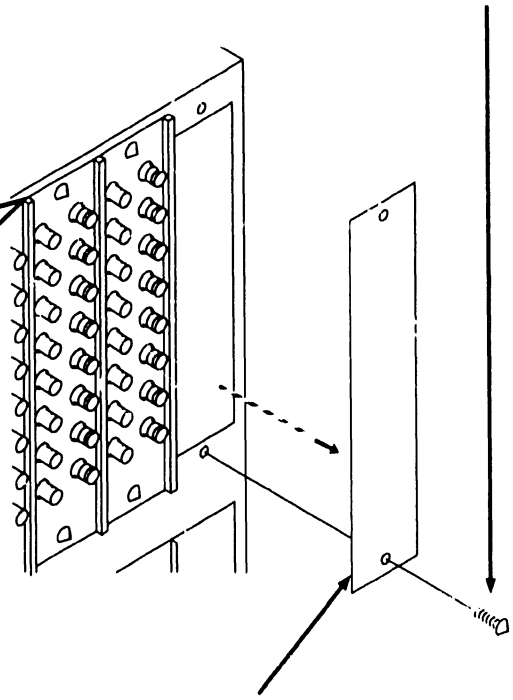

8 Remove I/O panel from rear door.

NOTE

I/O panels are interconnecting. Adjacent I/O panels must be loosened in order to remove an I/O panel.

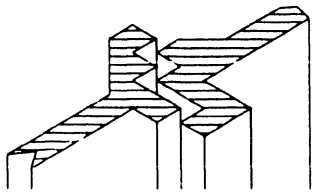

6 Loosen mounting screws of adjacent I/O panels.

● END

7.2 Mainframe Removal Procedures

7.2.29 6550 Gate Array Assembly Removal (Sheet 1 of 3)

NOTE

6550 Gate Array Assembly 270-1016 is the field replaceable item. Do not replace individual PCBs.

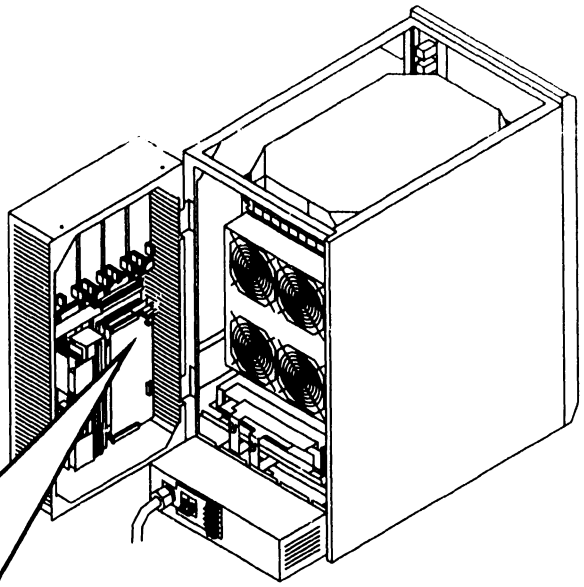

1. Power off mainframe and disconnect ac power. (➡4.2)
2. Remove top cover. (➡7.2.1)
3. Open rear door. (➡7.2.28)
4. Remove power cable from 6550 Gate Array assembly connector J3.

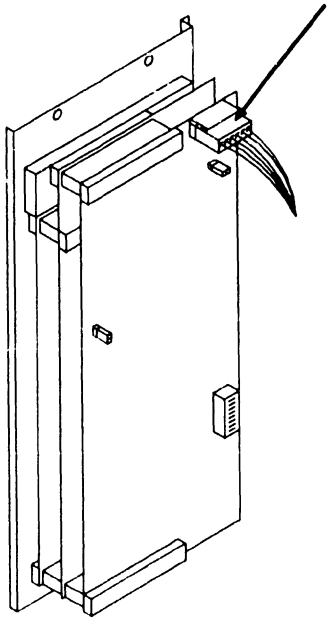

➡NEXT

7.2 Mainframe Removal Procedures

7.2.29 6550 Gate Array Assembly Removal (Sheet 2 of 3)

5 Remove BNC/TNC cable connectors.

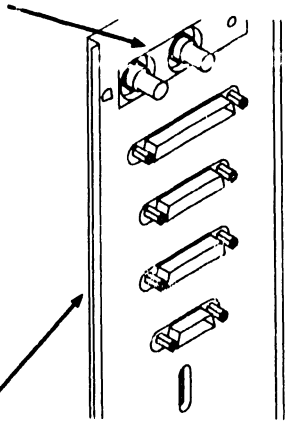

6 Remove TC cable attached to TC connector (RS232C, RS366, RS449, or X.21).

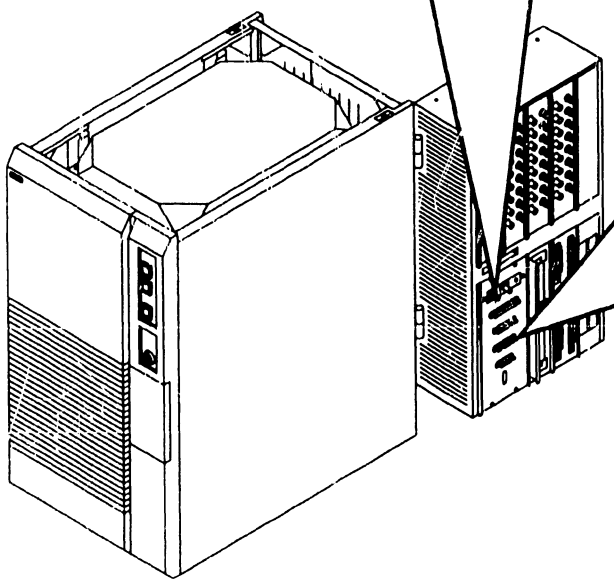

7 Loosen adjacent panels.

8 Remove four screws securing panel to rear door.

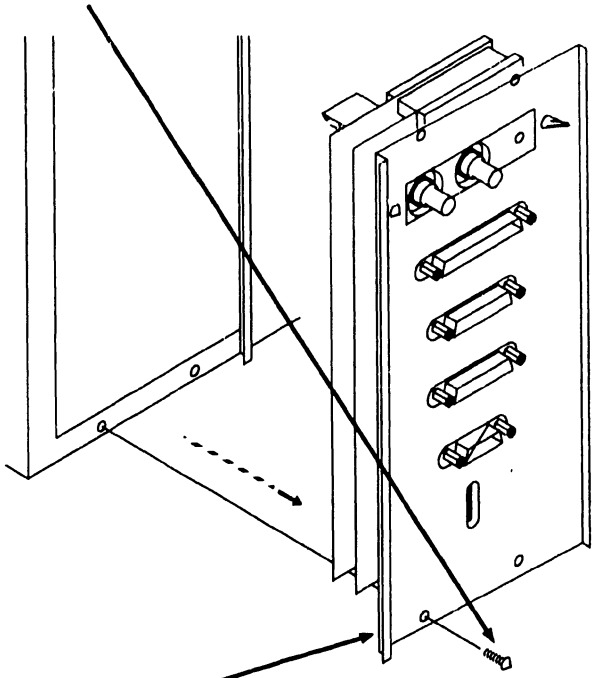

9 Remove 6550 Gate Array Assembly panel from rear door.

➡NEXT

7.2 Mainframe Removal Procedures

7.2.29 6550 Gate Array Assembly Removal (Sheet 3 of 3)

10 Verify proper jumper positions of X.21 support located on the GATC Driver/Receiver board (210-8713).

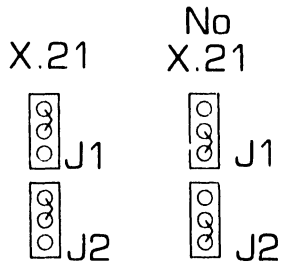

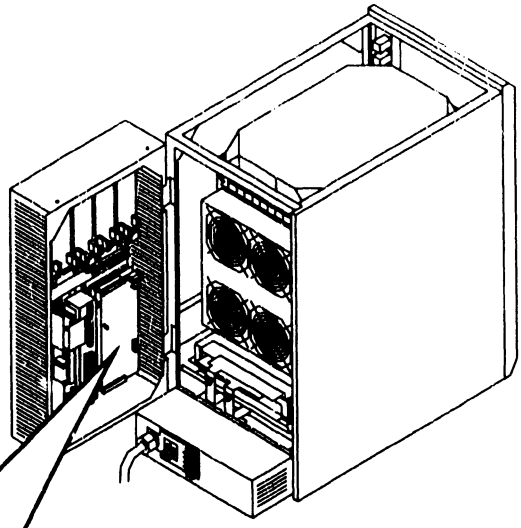

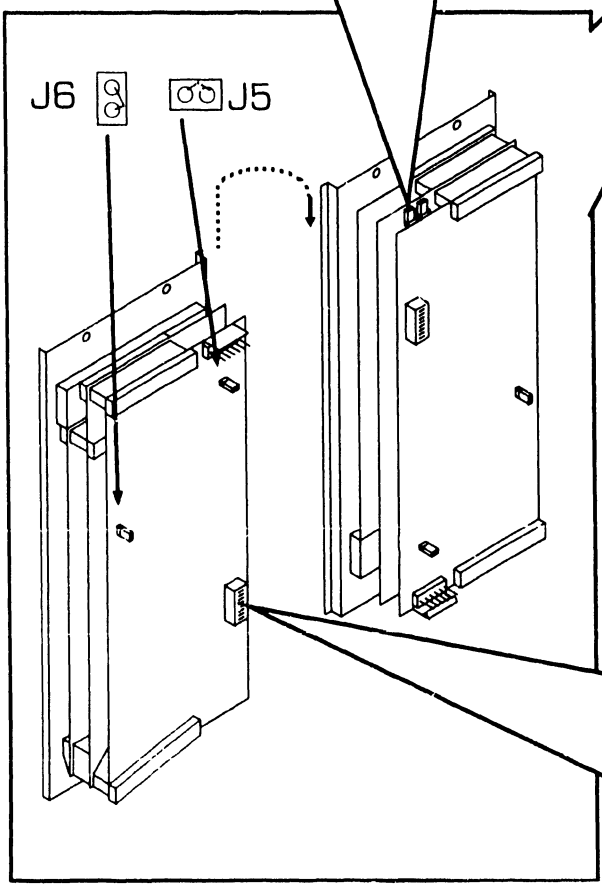

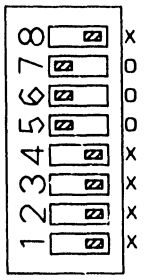

SW1
X.21

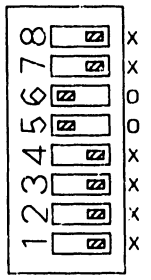

SW1
No X.21

▨ = Switch Position
o = Open Contacts
x = Closed Contacts

11 Verify proper jumper positions and switch setting on GATC CPU board (210-8714).

● END

7.2 Mainframe Removal Procedures

7.2.30 Multiline TC Panel Removal (Sheet 1 of 3)

1. Power off mainframe and disconnect ac power. (➡4.2)
2. Remove top cover. (➡7.2.1)
3. Open rear door. (➡7.2.28)

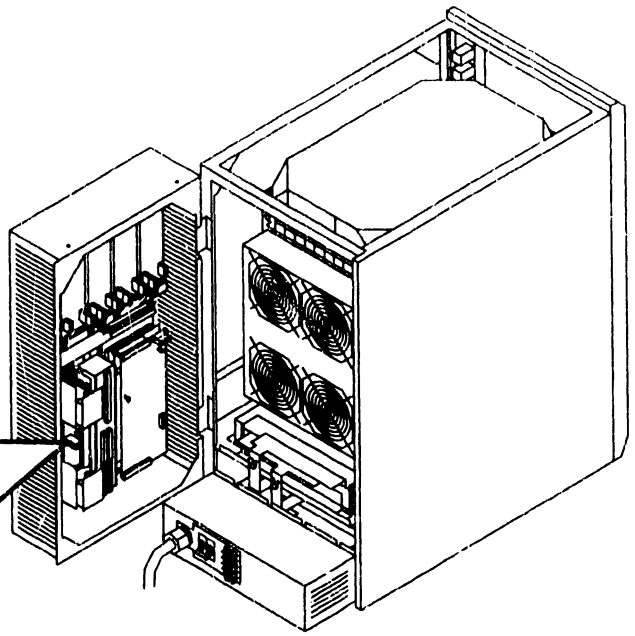

4. Remove signal cable from Multiline TC panel Serial Communications Link (SCL) PCB connector J1.

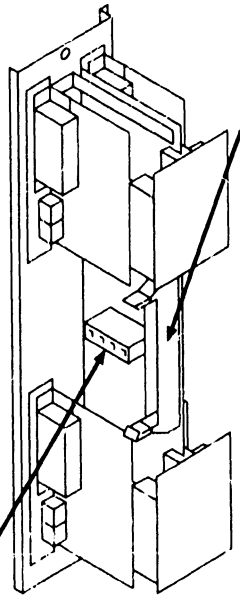

5. Remove power cable from Multiline TC panel SCL PCB connector J2.

➡NEXT

7.2.30 Multiline TC Panel Removal (Sheet 2 of 3)

6 Remove TC cables attached to TC ports (RS232C, RS366, RS449, or X.21)

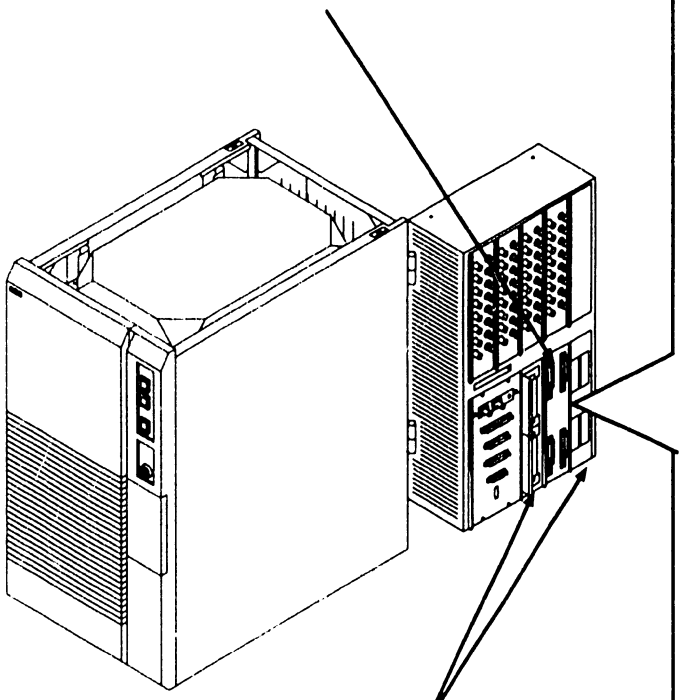

7 Loosen adjacent panels.

8 Remove two screws securing panel to rear door.

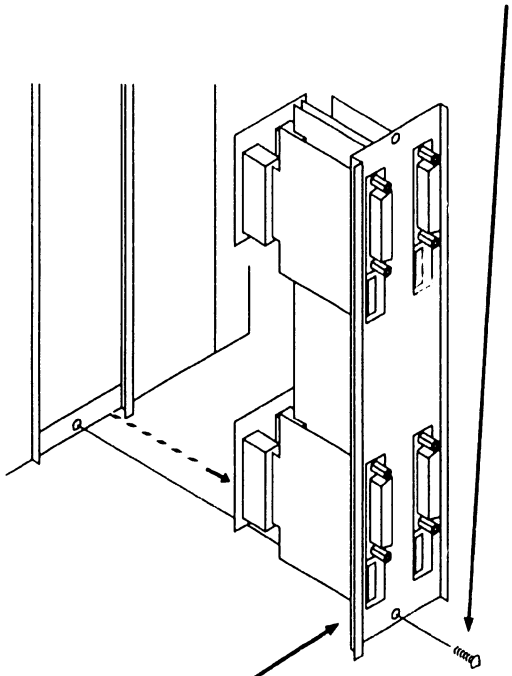

9 Remove Multiline TC panel from rear door.

➡NEXT

7.2 Mainframe Removal Procedures

7.2.30 Multiline TC Panel Removal (Sheet 3 of 3)

NOTE

Multiline TC panel 270-1004 is a subassembly that consists of the SCL PCB (210-8496) and mounting panel (452-4759). DO NOT remove the SCL PCB from the mounting panel. This subassembly is a field replaceable item.

Four TC interface modules are supported:

270-1093RS232C Interface Module (supersedes 270-1010)
270-1011RS366 Interface Module
270-1012X.21 Interface Module
270-1013RS449 Interface Module

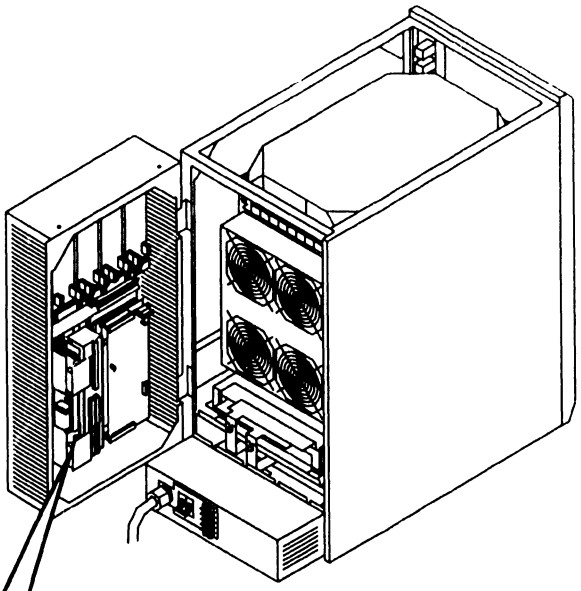

10 Remove block connectors.

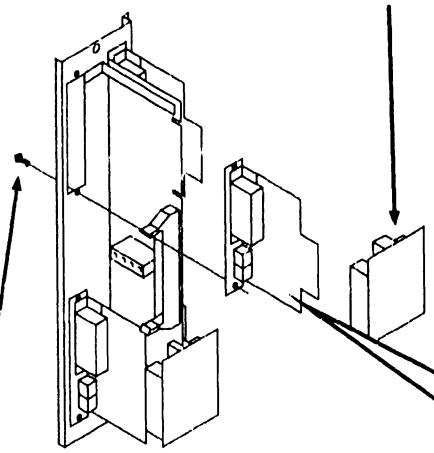

11 Remove two screws securing interface module to I/O panel.

12 On 270-1093 RS232C Interface Module, verify proper jumper positions.

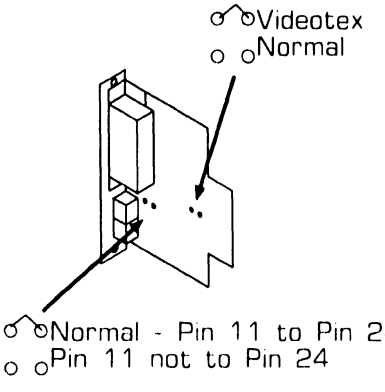

● END

7.2 Mainframe Removal Procedures

7.2.31 EAPA Panel Removal (Sheet 1 of 2)

1. Power off mainframe and disconnect ac power. (➡4.2)
2. Remove top cover. (➡7.2.1)
3. Open rear door. (➡7.2.28)

NOTE

The last EAPA panel in series must be terminated using Muxbus Terminator (210-8503).

EAPA panel power connectors J3 and J4 are in parallel.

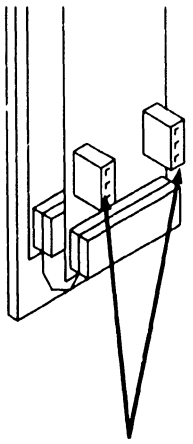

6. Remove power cable(s) from EAPA panel power connector J3 (J4).

4. Remove signal cable from EAPA panel data-in connector J1.

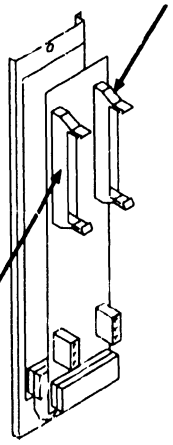

5. Remove signal cable (or Muxbus terminator) from EAPA panel data-out connector J2.

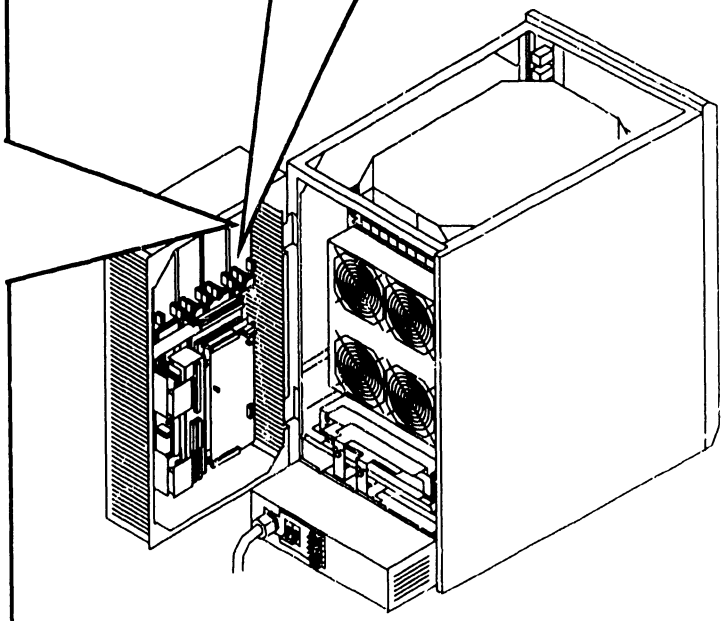

➡NEXT

7.2.31 EAPA Panel Removal (Sheet 2 of 2)

7 Remove BNC/TNC cables attached to BNC/TNC ports.

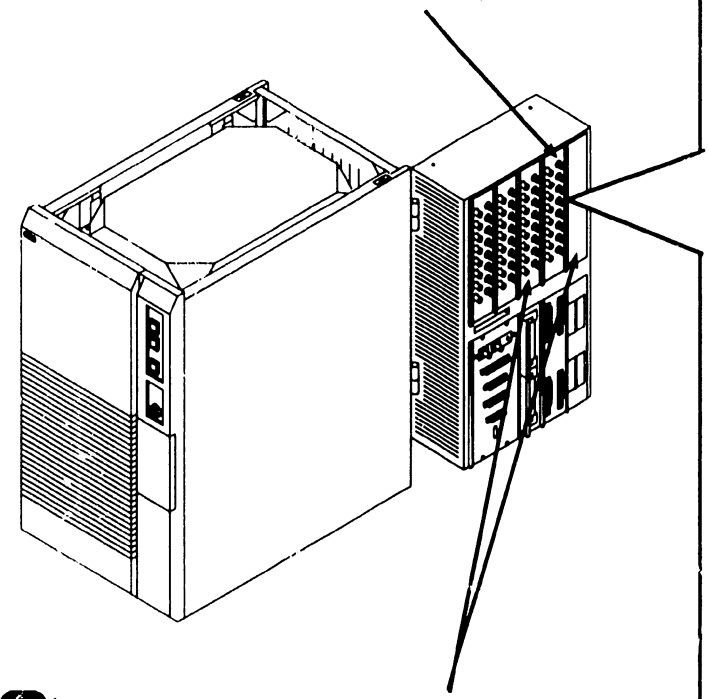

8 Loosen adjacent panels.

9 Remove two screws securing panel to rear door.

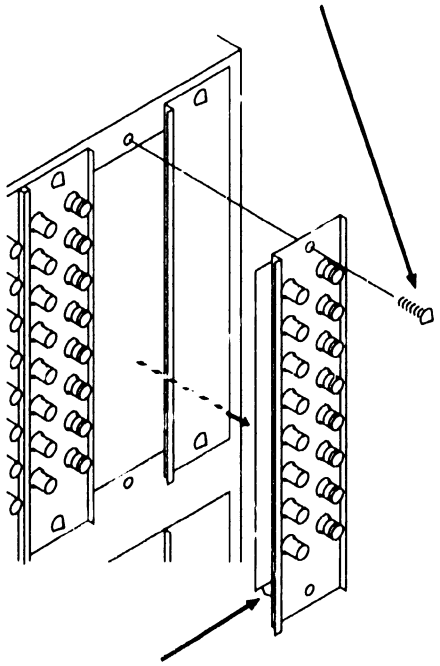

10 Remove EAPA panel from rear door.

● END

7.2 Mainframe Removal Procedures

7.2.32 SCU Interface Cable Removal (Sheet 1 of 2)

1. Power off mainframe and disconnect ac power. (➡4.2)
2. Remove top cover (➡7.2.1), front cover (➡7.2.2) and side covers (➡7.2.3).

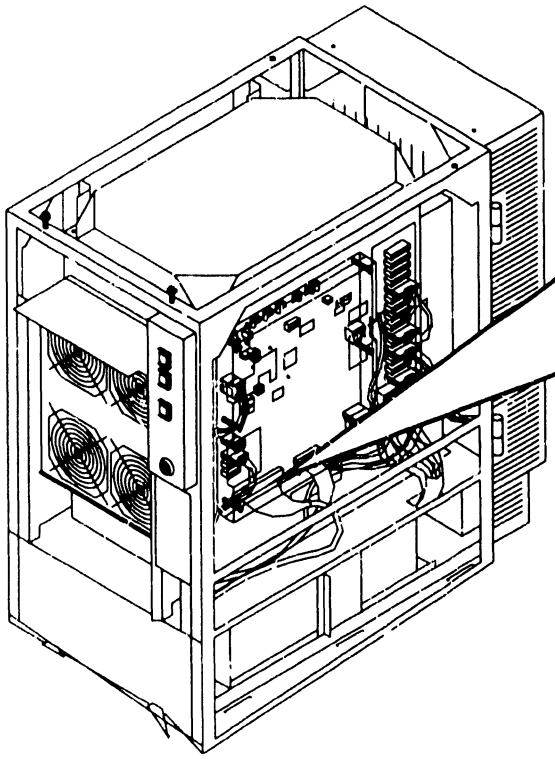

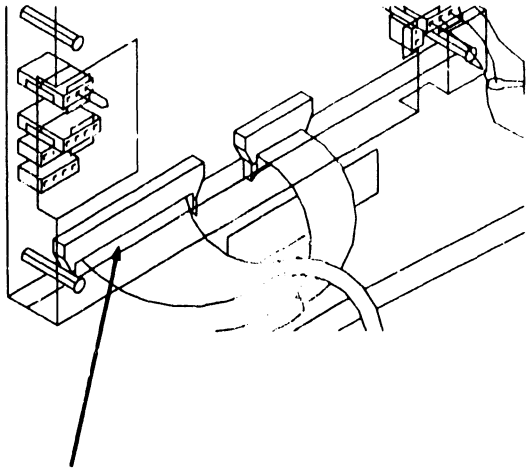

3. Remove SCU Interface cable from power controller board connector J6.
4. Cut tie wraps securing cable to chassis.

➡NEXT

7.2.32 SCU Interface Cable Removal (Sheet 2 of 2)

7 Open rear door. (➡7.2.28)

8 Remove two screws securing SCU interface cable clamp and cable connector to rear door.

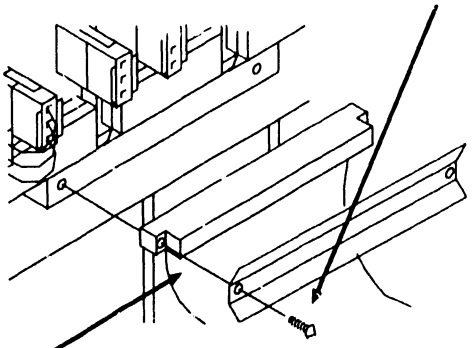

9 Remove SCU interface cable.

5 Remove SCU Interface cable from backplane connector J1.

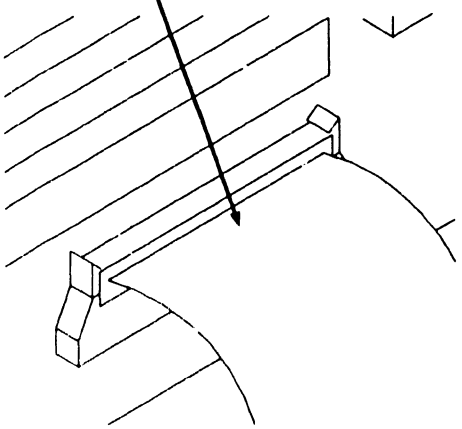

6 Move SCU cable to the power controller side of mainframe.

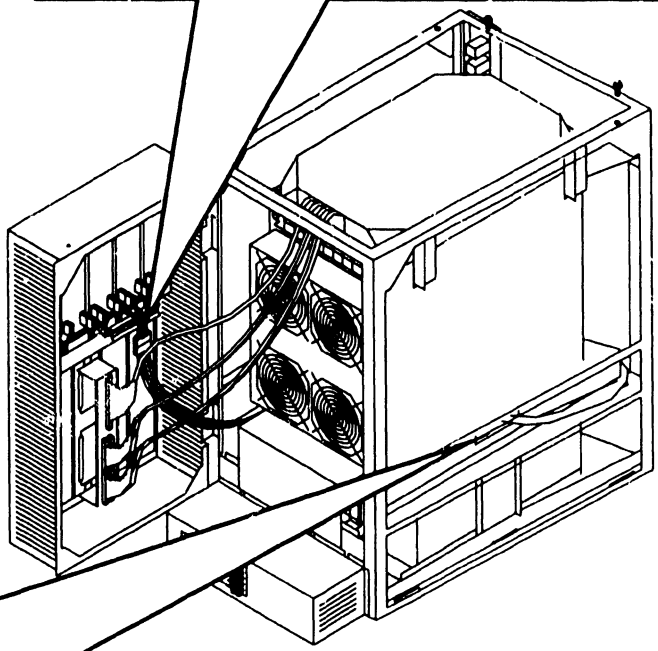

● END

7.2 Mainframe Removal Procedures

7.2.33 DC PDU Power Harness Removal (Sheet 1 of 2)

1. Power off mainframe and disconnect ac power. (➡4.2)

2. Remove top cover (➡7.2.1), front cover (➡7.2.2) and right side cover (➡7.2.3).

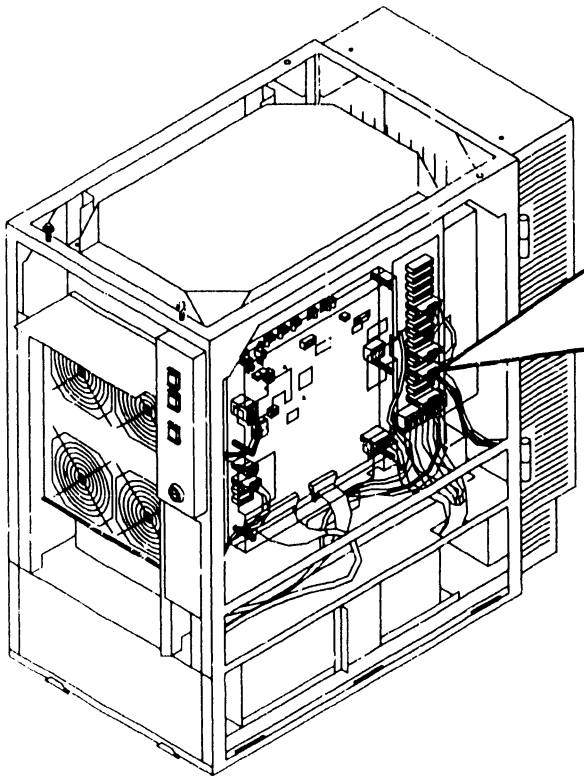

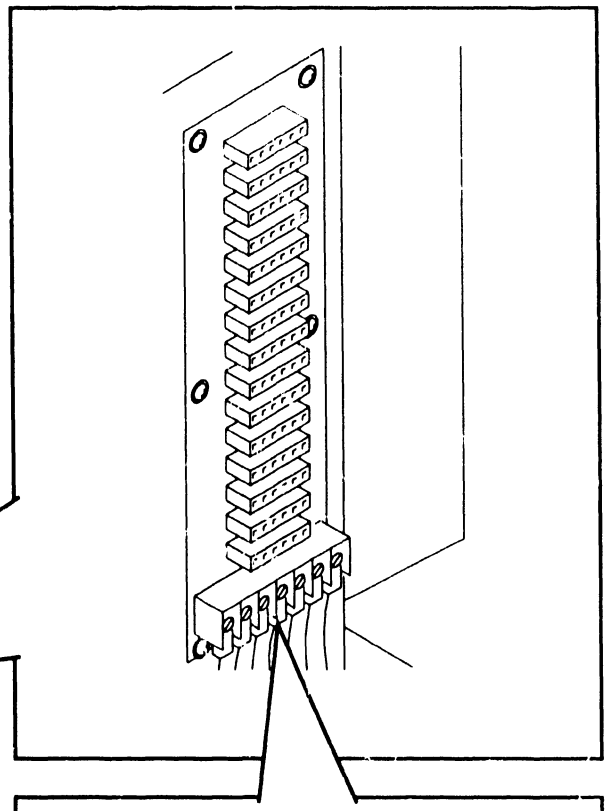

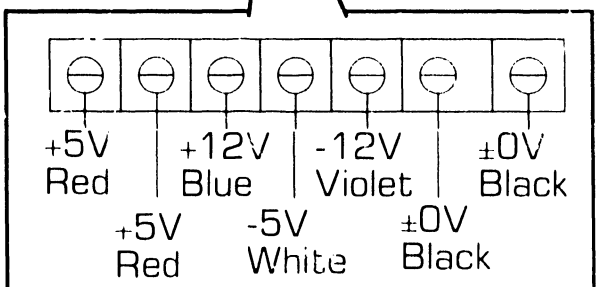

3. Note wire locations and color code and remove DC Power harness assembly from DC PDU 7-connector terminal block.

➡NEXT

7.2.33 DC PDU Power Harness Removal (Sheet 2 of 2)

4. Open rear door. (➡7.2.28)

5. Slide AC PDU out of chassis about 3 inches. (➡7.2.23)

6. Remove bus bar shield. (➡7.2.24)

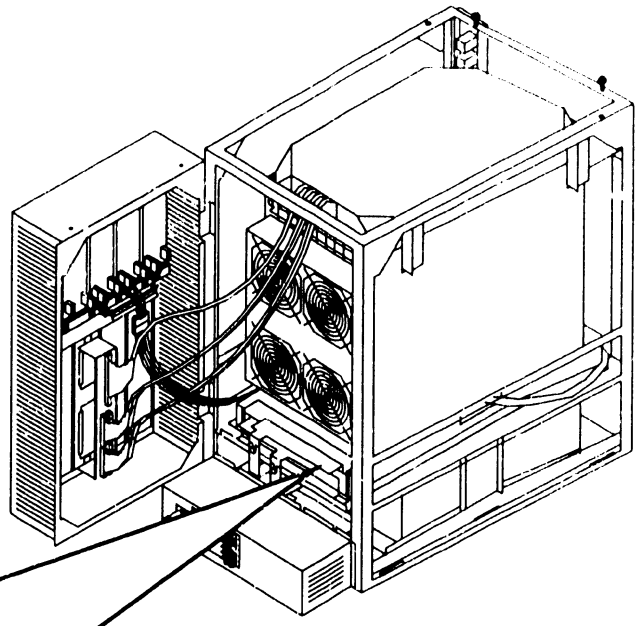

7. Note wire locations and color code and remove DC power harness assembly from multioutput supply.

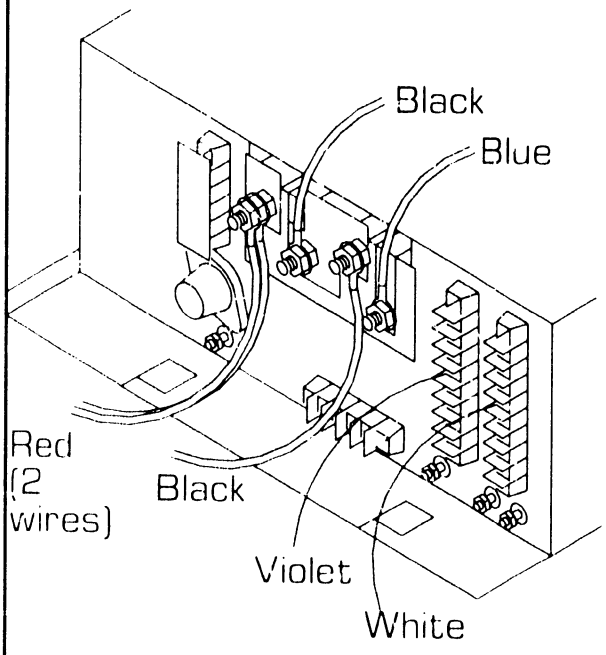

● END

7.2 Mainframe Removal Procedures

7.2.34 Multioutput Power Supply On/Off Cable Removal (Sheet 1 of 2)

1. Power off mainframe and disconnect ac power. [➡4.2]
2. Remove top cover [➡7.2.1], front cover [➡7.2.2] and side covers [➡7.2.3].

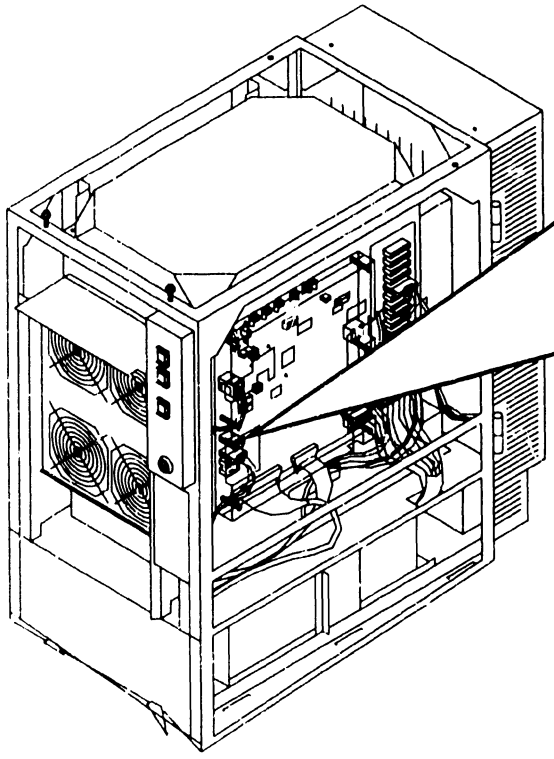

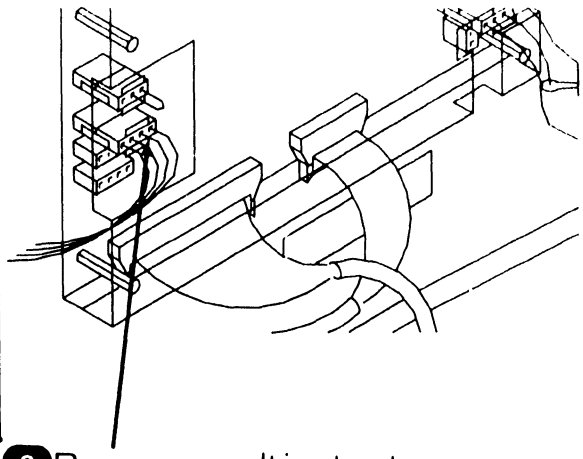

3. Remove multioutput power supply On/Off cable from power supply controller board connector J3.

➡NEXT

7.2.34 Multioutput Power Supply On/Off Cable Removal (Sheet 2 of 2)

4. Open rear door. (➡7.2.28)
5. Slide AC PDU out of chassis about 3 inches.
6. Remove bus bar shield. (➡7.2.24)
7. Note wire locations and color code and remove multioutput power supply On/Off cable from multioutput supply.

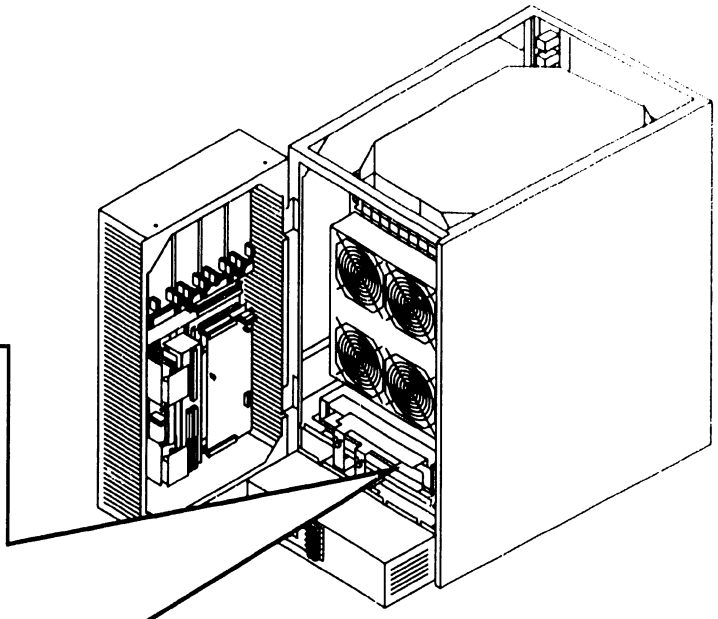

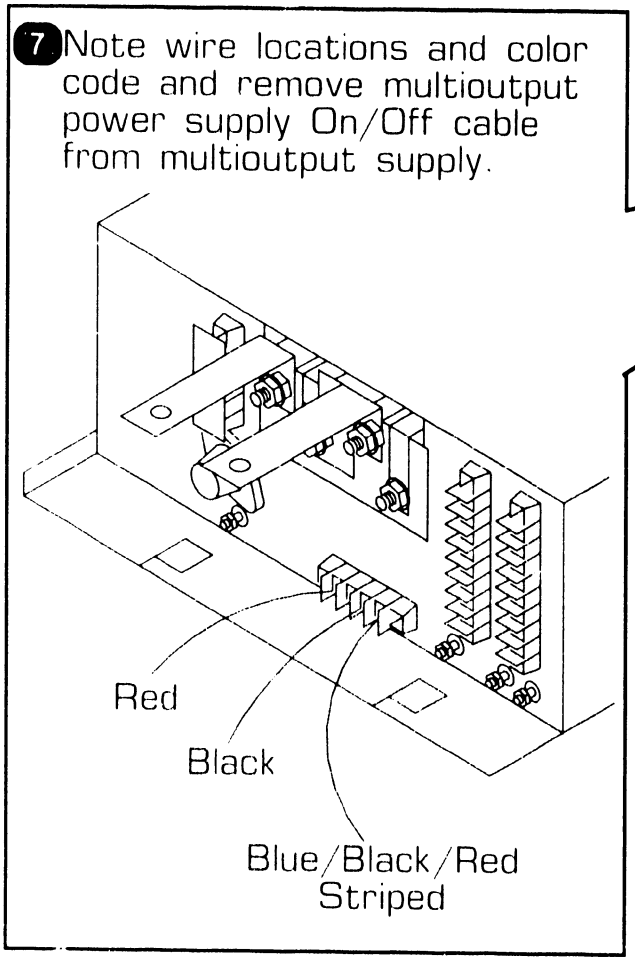

● END

7.2.35 Multioutput Power Supply AC PDU Cable Removal

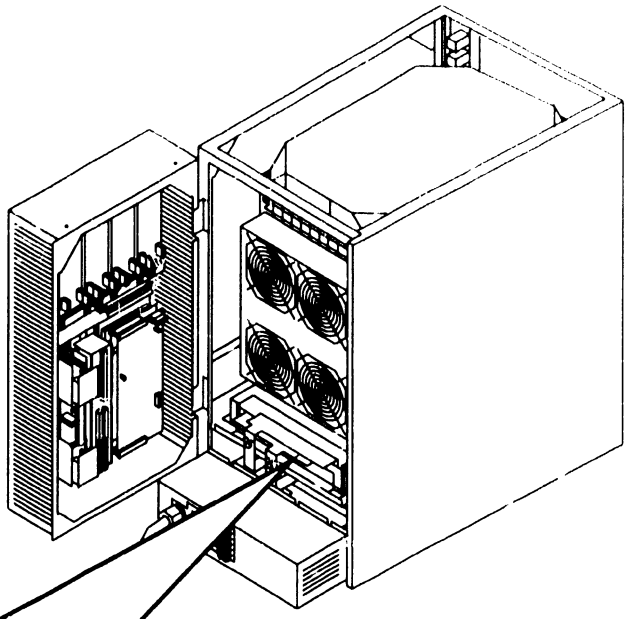

1. Power off mainframe and disconnect ac power. (➡4.2)
2. Remove top cover. (➡7.2.1)
3. Open rear door. (➡7.2.28)
4. Slide AC PDU out of chassis about 3 inches. (➡7.2.23)
5. Remove power supply ac power cable from AC PDU connector J5. (➡7.2.24)
6. Remove bus bar shield. (➡7.2.24)
7. Remove multioutput ac connector terminal block cover.

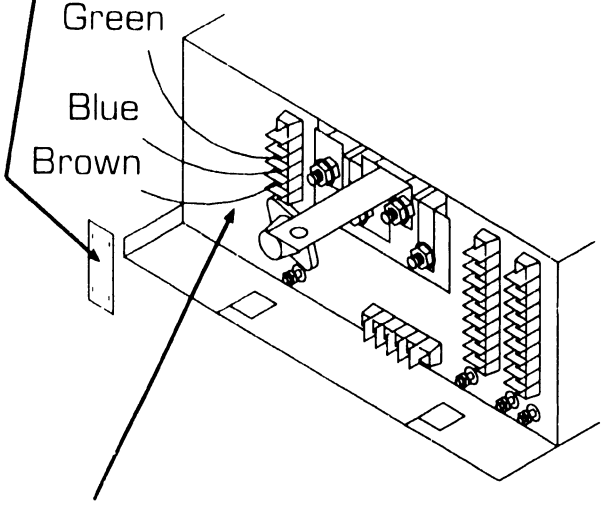

8. Note wire locations and color code and remove power supply ac power cable from multioutput supply.

● END

7.2 Mainframe Removal Procedures

7.2.36 Foam Air Filter Removal

WARNING

Foam air filter must be in place to prevent dust and foreign particles from entering the mainframe through the air intake vents.

1. Power off mainframe and disconnect ac power. (➡4.2)

NOTE

The foam air filter is secured in place using 1'' molded nylon hook tape.

2. Remove foam air filter from underneath front of mainframe.

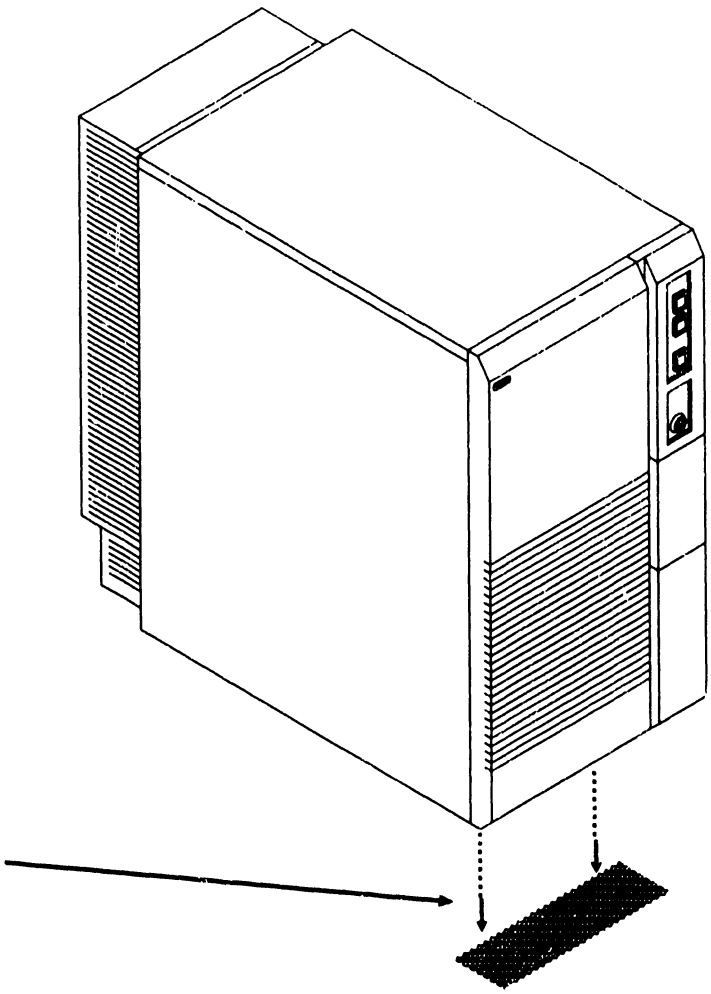

● END

.37 Optional High-Speed SMD IOC (70V98-4A) Removal (Sheet 1 of 3)

Power off mainframe and disconnect ac power. (➡4.2)

Remove top cover. (➡7.2.1)

Remove card cage cover. (➡7.2.4)

NOTE

V98-4A must be installed in lowest priority slot following 23V98-4A IOC. 70V98-4A uires operating system 7.20 higher.

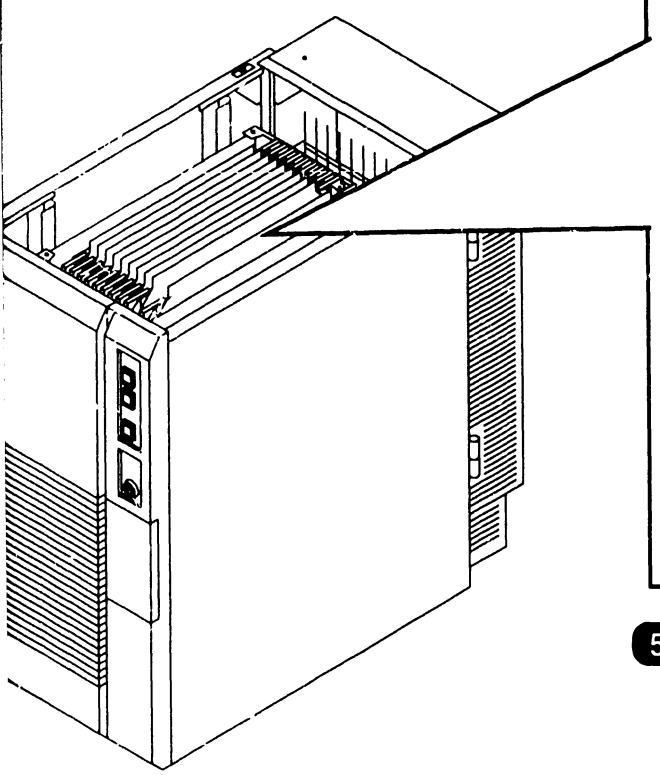

4 Note cable positions and remove 'A' cable from connector J5 and 'B' cables from connectors J4, J3, J2, and J1 (if installed).

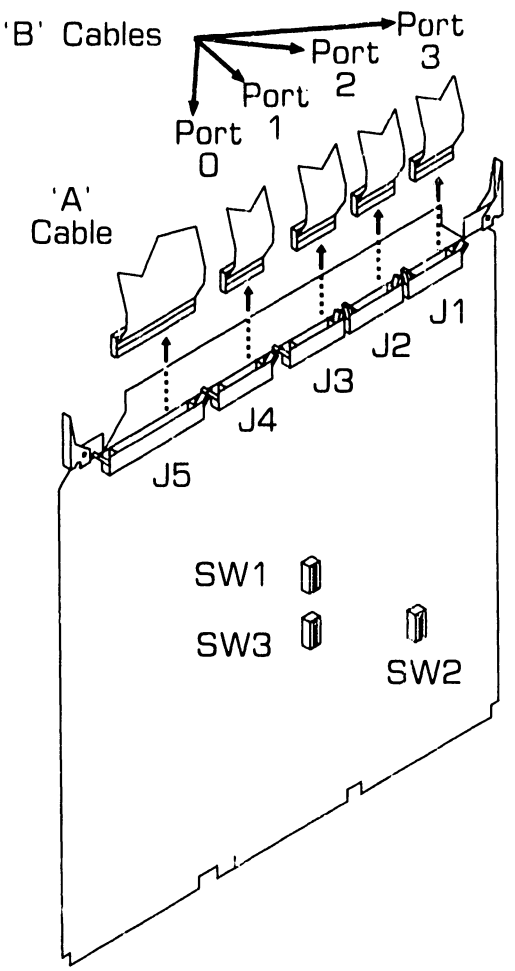

5 Remove PCB from backplane. (➡7.2.5)

➡NEXT

7.2.37 Optional High-Speed SMD IOC (70V98-4A) Removal (Sheet 2 of 3)

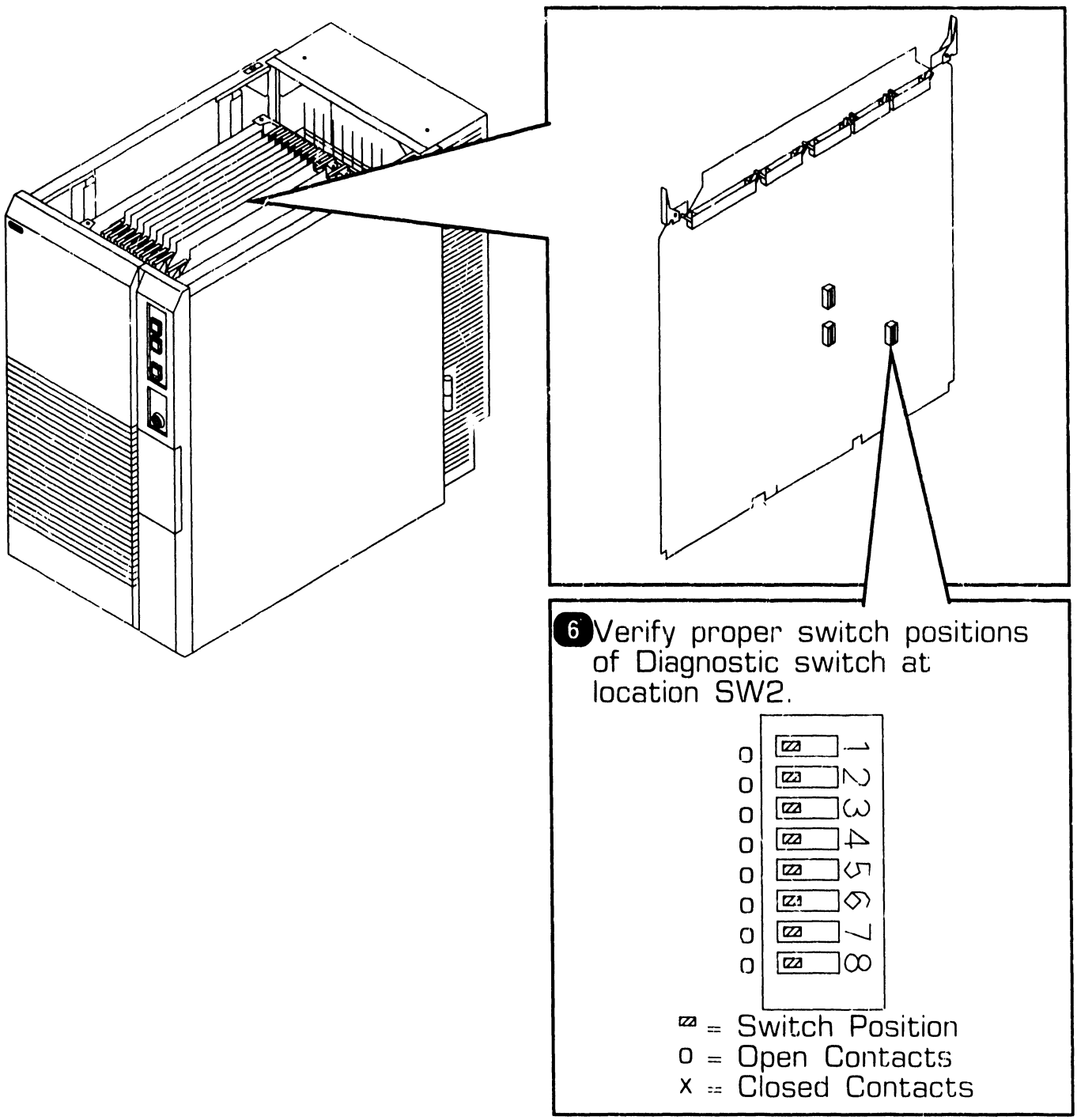

6 Verify proper switch positions of Diagnostic switch at location SW2.

▨ = Switch Position
O = Open Contacts
X = Closed Contacts

➡NEXT

.37 Optional High-Speed SMD IOC (70V98-4A) Removal (Sheet 3 of 3)

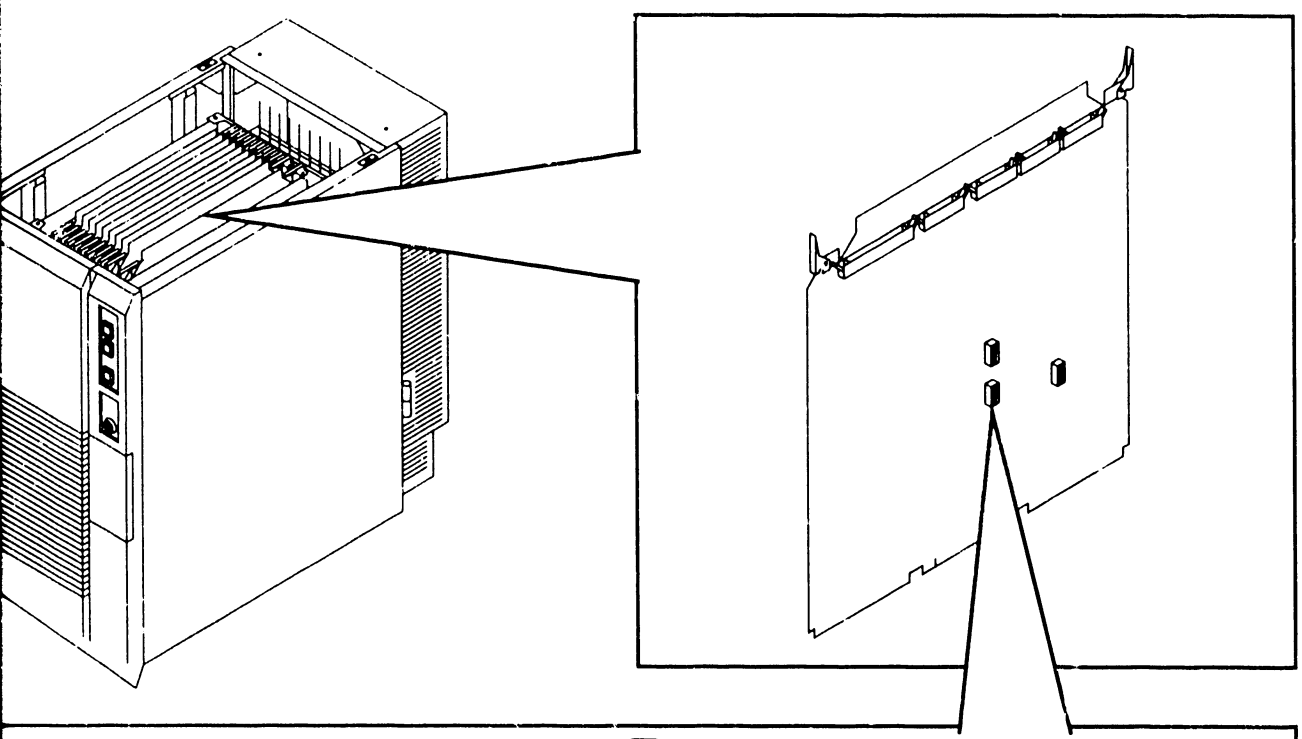

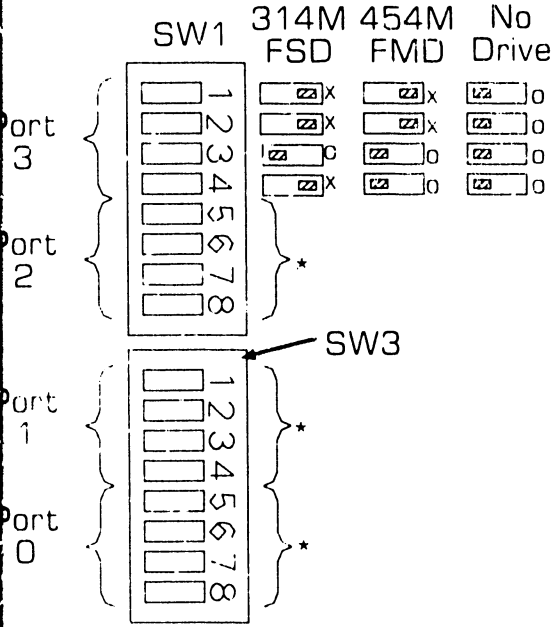

7 Verify proper switch settings for drive-types (or no drive) installed on each port; SW1 Ports 2 and 3, and SW3 Ports 0 and 1.

NOTE

Drive-type switch settings are shown for Port 3. Ports 0-2 drive-type switch settings are identical.

▨ = Switch Position
o = Open Contacts
x = Closed Contacts

● END

.3 SCU (Professional Computer) Removal Procedures

SCU (Professional Computer) has unique boards, External PCI Con- r board (210-9848) and CPU/ em Board (210-9521-2C). Re- l procedures for PC subassem- are found in the related documen- n, part number 742-1190.

he unique boards, follow the pro- es in the related documentation.

● END

7.4 SCU (PM-004L) Monitor Removal Procedures

Removal procedures for the SCU (PM-004L) Monitor is found in the related documentation, part number 742-1647.

● END

9.9.5 Multiline TC (23V96-8A) (Sheet 1 of 3)

Multiline TC option provides an interface for 8 communication lines. Only one protocol is supported on all lines. This option contains:

- 210-8491-A IOC, Multiline TC
- 270-1004 Multiline TC Mounting Panel (less interface modules) (2)
- 220-3610 D-Bus Cable (2)
- 220-2374 DC PDU Power Cable (1)
- 220-2436 Power 'Y' Cable (1)

NOTE

Multiline TC Connector panels can be mounted in mainframe cabinet or large cable concentrator cabinet.

IOC Installation

1. Power off mainframe and disconnect ac power. (➡4.2)
2. Remove top cover. (➡7.2.1)
3. Remove card cage cover. (➡7.2.4)
4. Verify proper switch positions of diagnostic switch at location L202. (➡7.2.18)
5. Verify proper switch positions of diagnostic port select switch at location L220. (➡7.2.18)
6. Install IOC in any available I/O option slot.

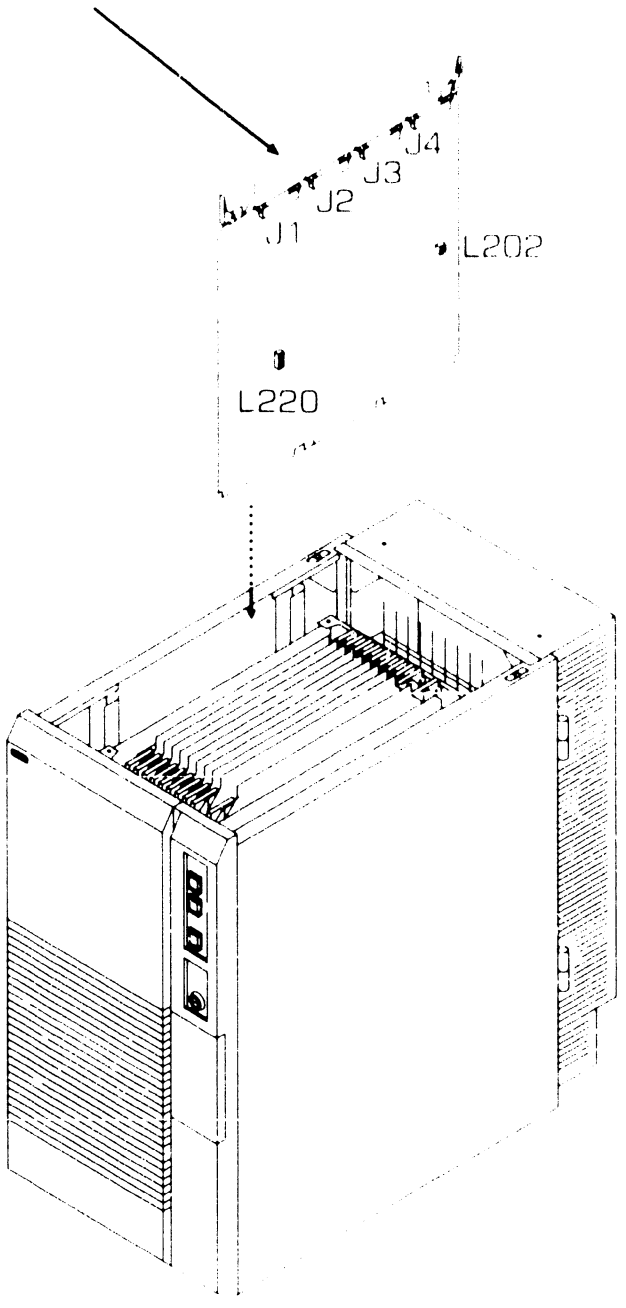

➡NEXT

9.9.5 Multiline TC (23V96-8A) (Sheet 2 of 3)

Connector Panel Installation

NOTE

Connector panel is equipped with an SCI board only. Interface modules must be installed. Interface modules supported are:

270 1093 RS232 Interface Module
270 1011 RS366 Interface Module
270 1012 RS449 Interface Module
270 1013 X.21 Interface Module

Connector panels must be mounted in adjacent I/O panel locations due to length of Power 'Y' cable.

NOTE

If RS366 Interface Modules (Autodial support) are being used, the RS366 Interface Modules must be installed in connector panel port locations 1 and 3, and the RS232 Interface Modules must be installed in connector panel port locations 0 and 2.

1 Remove one blank I/O panel from rear door for each connector panel installed. (➡7.2.28)

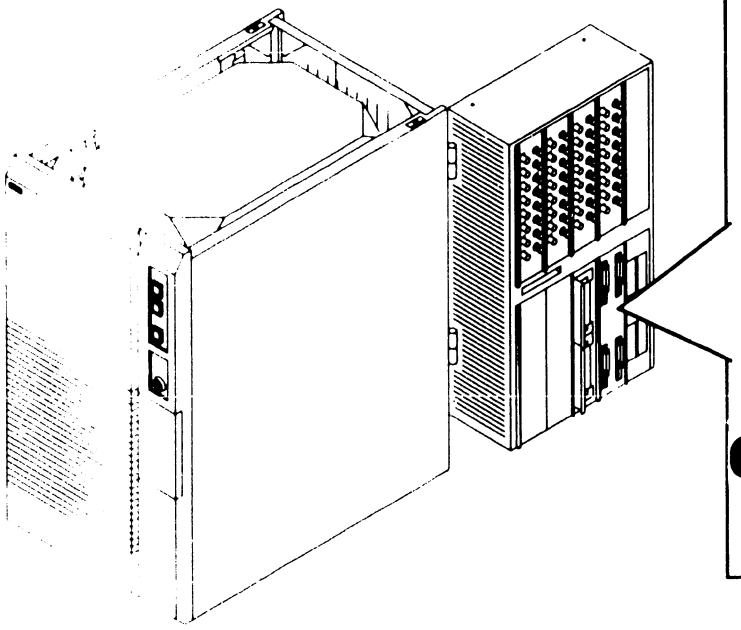

2 Install interface modules on mounting panel. (➡7.2.30)

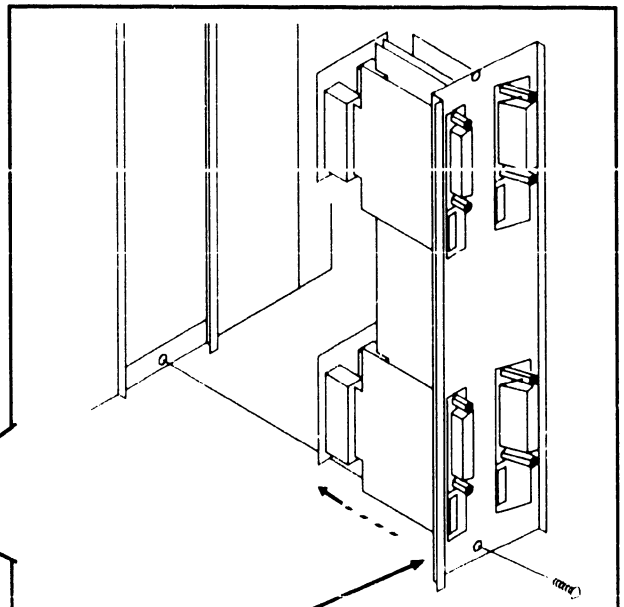

3 Install connector panel in space vacated by blank I/O panel.

➡NEXT

9.9.5 Multiline TC (23V96-8A) (Sheet 3 of 3)

Multiline IOC/Connector Panel Cabling

1. Install D-Bus cables through mainframe to cardcage.
2. Connect D-Bus cable from connector panel 1 (ports 0-3) SCL board J1 to IOC connector J1.
3. Connect D-Bus cable from connector panel 2 (ports 4-7) SCL board J1 to IOC connector J2.
4. Connect Power 'Y' cable to adjacent connector panels SCL board's connector J2.
5. Connect DC PDU Power cable from an available DC PDU connector to connector panel to Power 'Y' cable.

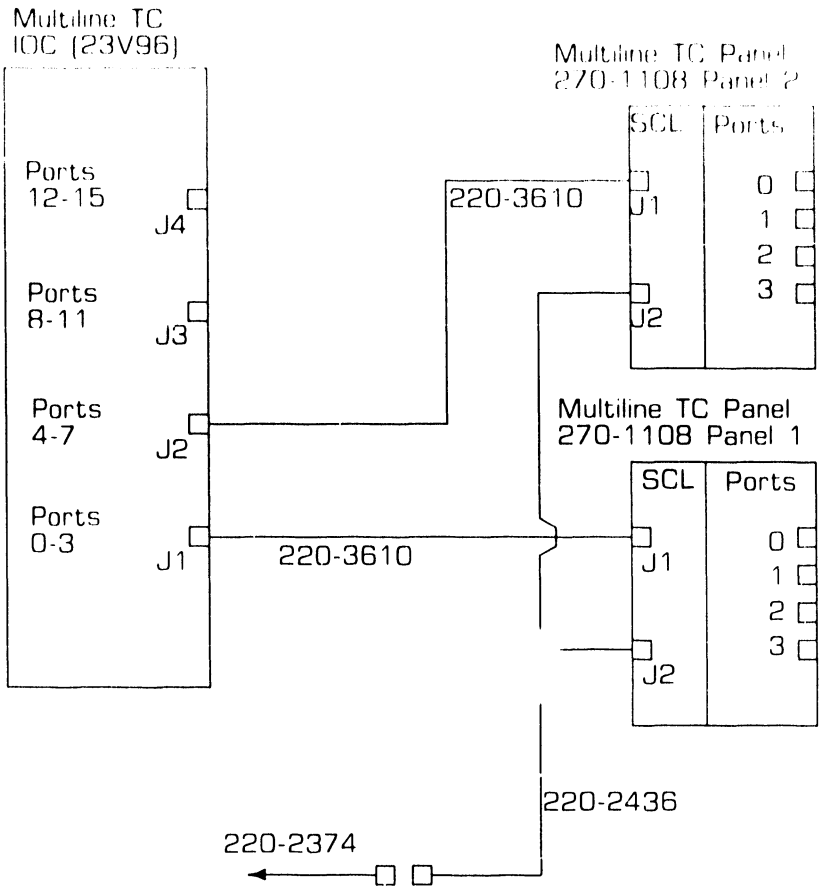

● END

9.9.6 Multiline TC (23V96-16A) (Sheet 1 of 3)

Multiline TC option provides an interface for 16 communication lines. Only one protocol is supported on all lines. This option contains:

- 210-8491-A IOC, Multiline TC
- 270-1004 Multiline TC Mounting Panel (less interface modules) (4)
- 220-3610 D-Bus Cable (4)
- 220-2374 DC PDU Power Cable (2)
- 220-2436 Power 'Y' Cable (2)

NOTE

Multiline TC Connector panels can be mounted in mainframe cabinet or large cable concentrator cabinet.

IOC Installation

1. Power off mainframe and disconnect ac power. (➡4.2)
2. Remove top cover. (➡7.2.1)
3. Remove card cage cover. (➡7.2.4)
4. Verify proper switch positions of diagnostic switch at location L202. (➡7.2.16)
5. Verify proper switch positions of diagnostic port select switch at location L220. (➡7.2.18)
6. Install IOC in any available I/O option slot.

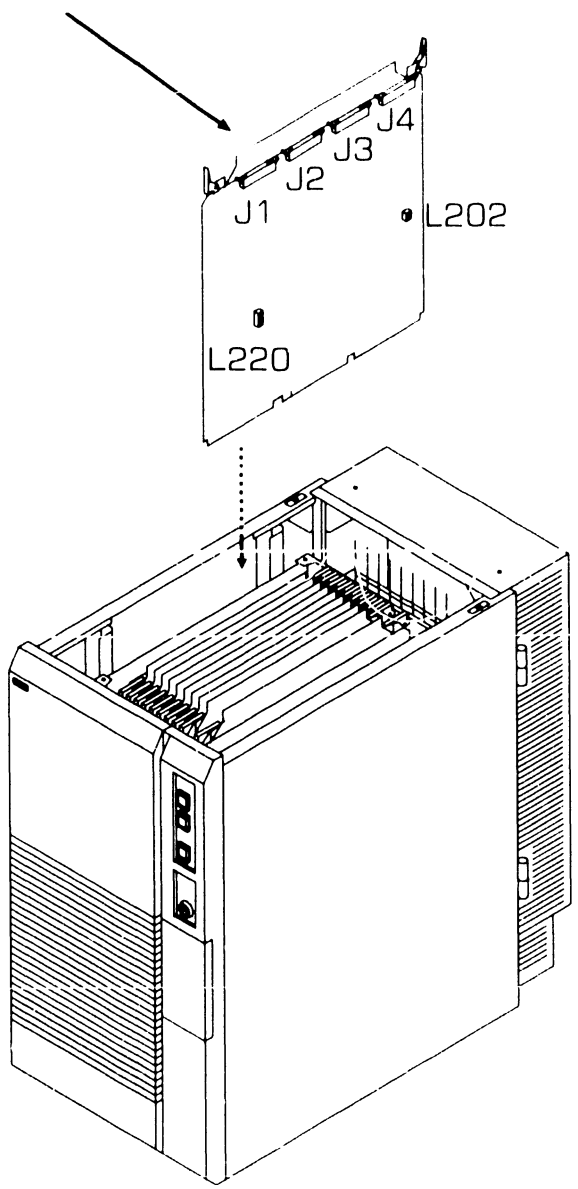

➡NEXT

9.9.6 Multiline TC (23V96-16A) (Sheet 2 of 3)

Connector Panel Installation

NOTE

Connector panel is equipped with an SCI board only. Interface modules must be installed. Interface modules supported are:

270-1093 RS232 Interface Module
270-1011 RS366 Interface Module
270-1012 RS449 Interface Module
270-1013 X.21 Interface Module

Connector panels must be mounted in adjacent I/O panel locations due to length of Power 'Y' cable.

1. Remove one blank I/O panel from rear door for each connector panel installed. (➡7.2.28)

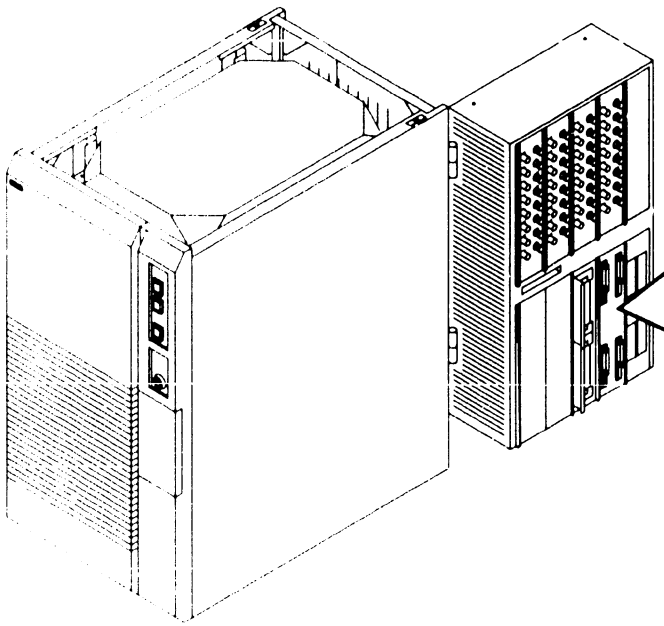

NOTE

If RS366 Interface Modules (Autodial support) are being used, the RS366 Interface Modules must be installed in connector panel port locations 1 and 3, and the RS232 Interface Modules must be installed in connector panel port locations 0 and 2.

2. Install interface modules on mounting panel. (➡7.2.30)

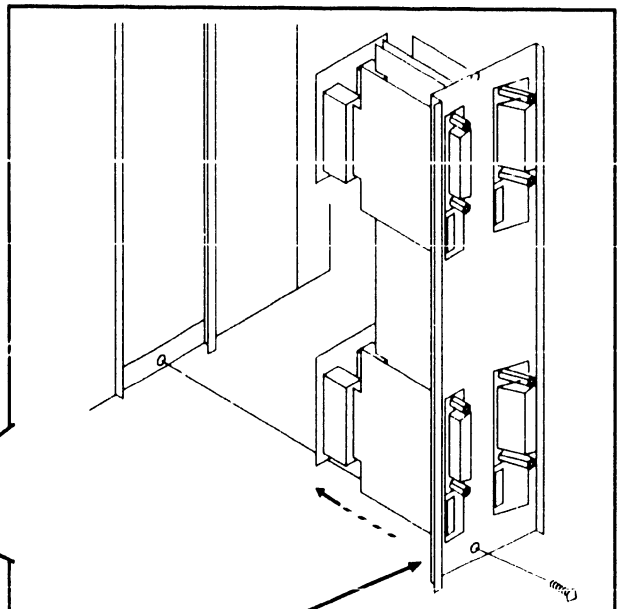

3. Install connector panel in space vacated by blank I/O panel.

➡NEXT

9.9.6 ultiline TC (23V96-16A) (Sheet 3 of 3)

Multiline IOC/Connector Panel Cabling

1. Install D-Bus cables through mainframe to cardcage.
2. Connect D-Bus cable from connector panel 1 (ports 0-3) SCL board J1 to IOC connector J1.
3. Connect D-Bus cable from connector panel 2 (ports 4-7) SCL board J1 to IOC connector J2.
4. Connect D-Bus cable from connector panel 1 (ports 8-11) SCL board J1 to IOC connector J3.
5. Connect D-Bus cable from connector panel 1 (ports 12-15) SCL board J1 to IOC connector J4.
6. Connect each Power 'Y' cable to adjacent connector panels SCL board's connector J2.
7. Connect each DC PDU Power cable from an available DC PDU connector to connector panel to Power 'Y' cable

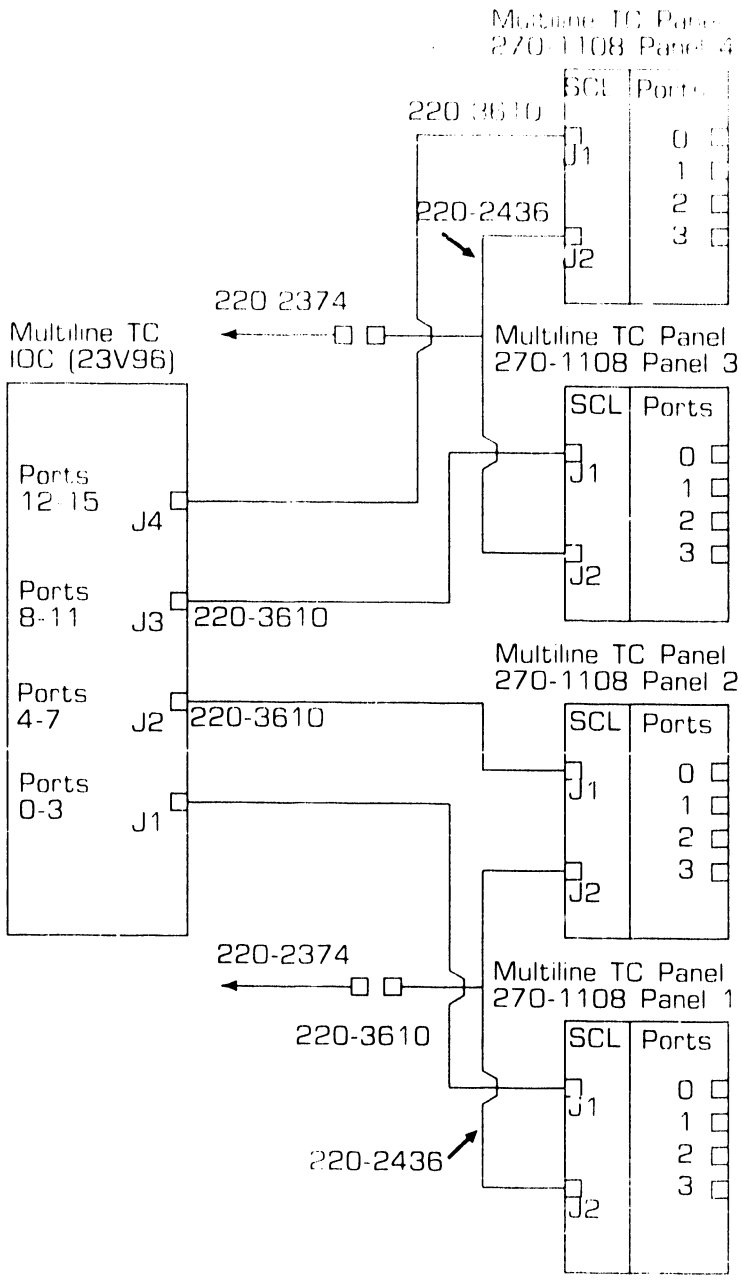

9.10.1 Additional EAPA Installation (Sheet 1 of 3)

NOTE

Additional EAPA panels can be installed in either the mainframe or the large cable concentrator.

Additional EAPA half panels can be installed on the VS-7010 mainframe, providing up to an additional thirty-two 928-type serial ports per Serial IOC. The VS-7010 computer system supports a maximum of 96 serial workstations. Up to four Serial IOCs are supported.

Components required for additional mainframe EAPA panel installation are:

- 210-9809-AOC, Serial (23V67) (includes terminator 210-8503)
- 270-0975 EAPA
- 289-0991 EAPA Cable Kit (KIT-PA-7B) (cable kit includes: 220-2339 APA Power Jumper 220-3419 MuxBus Cable 220-3319 APA Signal Jumper 220-2374 DC PDU Power Cable 220-2346 APS Power Jumper)

IOC Installation

1. Power off mainframe and disconnect ac power. (➡4.2)
2. Remove top cover. (➡7.2.1)
3. Remove card cage cover. (➡7.2.4)
4. Verify proper switch positions of diagnostic switch at location L194. (➡7.2.15)
5. Install Serial IOC in any available I/O Slot.

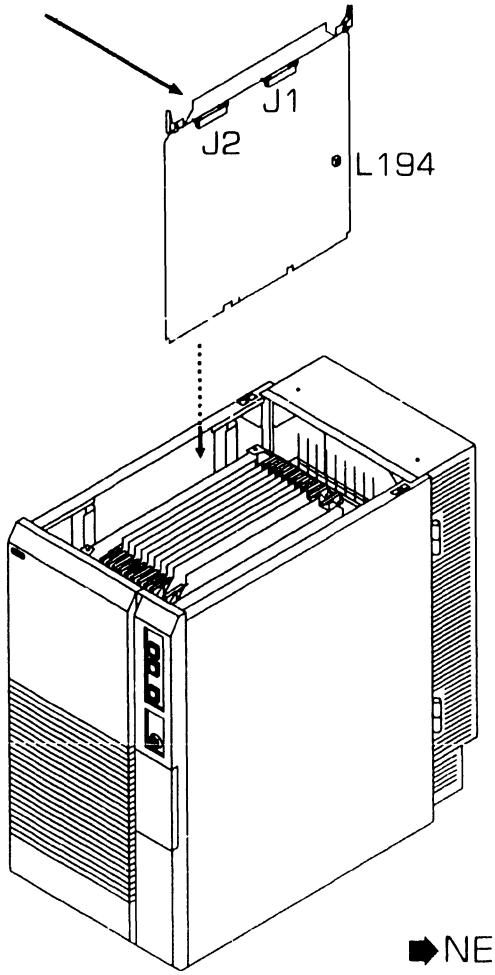

➡NEXT

9.10.1 Additional EAPA Installation (Sheet 2 of 3)

Connector Panel Installation

NOTE

EAPA Panels must be located in adjacent I/O panel locations due to cabling restrictions.

1. Remove one blank I/O panel from rear door for each connector panel installed. (➡7.2.28)

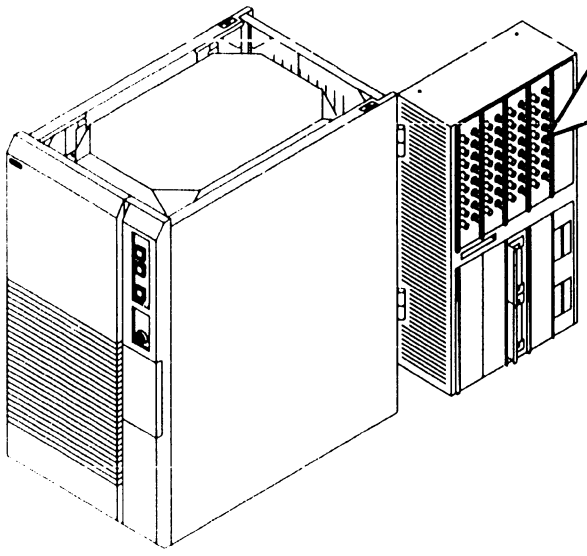

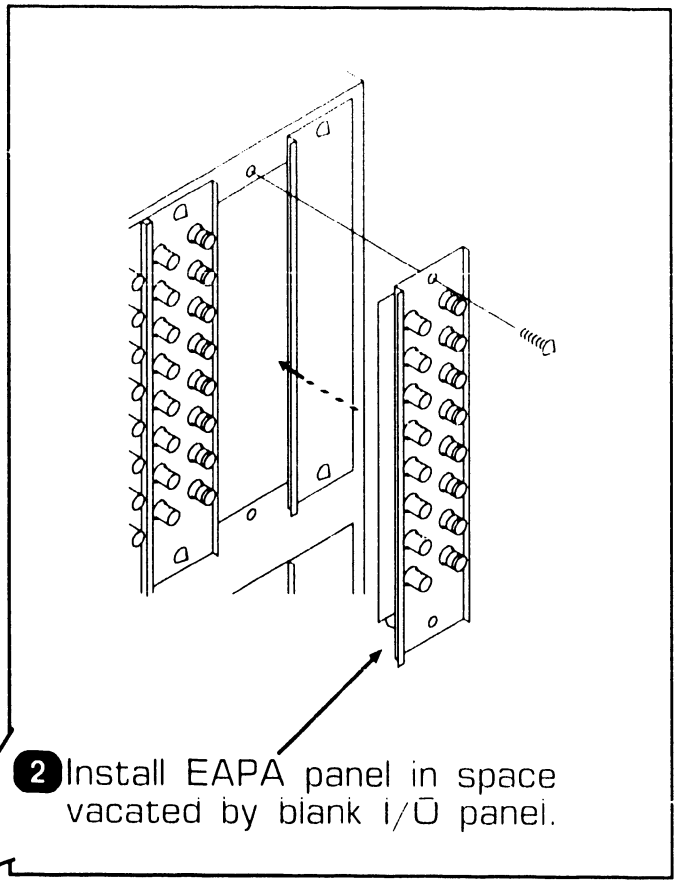

2. Install EAPA panel in space vacated by blank I/O panel.

➡NEXT

9.10 Option Panel Installation

9.10.1 Additional EAPA Installation (Sheet 3 of 3)

Serial IOC/EAPA Panel Cabling

1. Install MuxBus cable through mainframe to cardcage.
2. Connect MuxBus cable to Serial IOC connector J2.
3. Connect MuxBus cable to first additional EAPA connector J1.
4. Connect APA Signal Jumper between first EAPA connector J2 (signal-out) to adjacent EAPA connector J1 (signal-in).
5. Connect APA signal jumpers between remaining EAPAs as described in step 4. Terminate last EAPA connector J2 with terminator PCB 210-8503.

NOTE

EAPA power cable connectors J3 and J4 are in parallel.

6. Connect Inline EAPA power cable between center two adjacent EAPA panels power connectors.
7. Connect DC PDU Power cable from an available DC PDU connector to the Inline EAPA power cable.
8. Connect APA power jumper cables from outer most EAPA panels to adjacent EAPA panels.

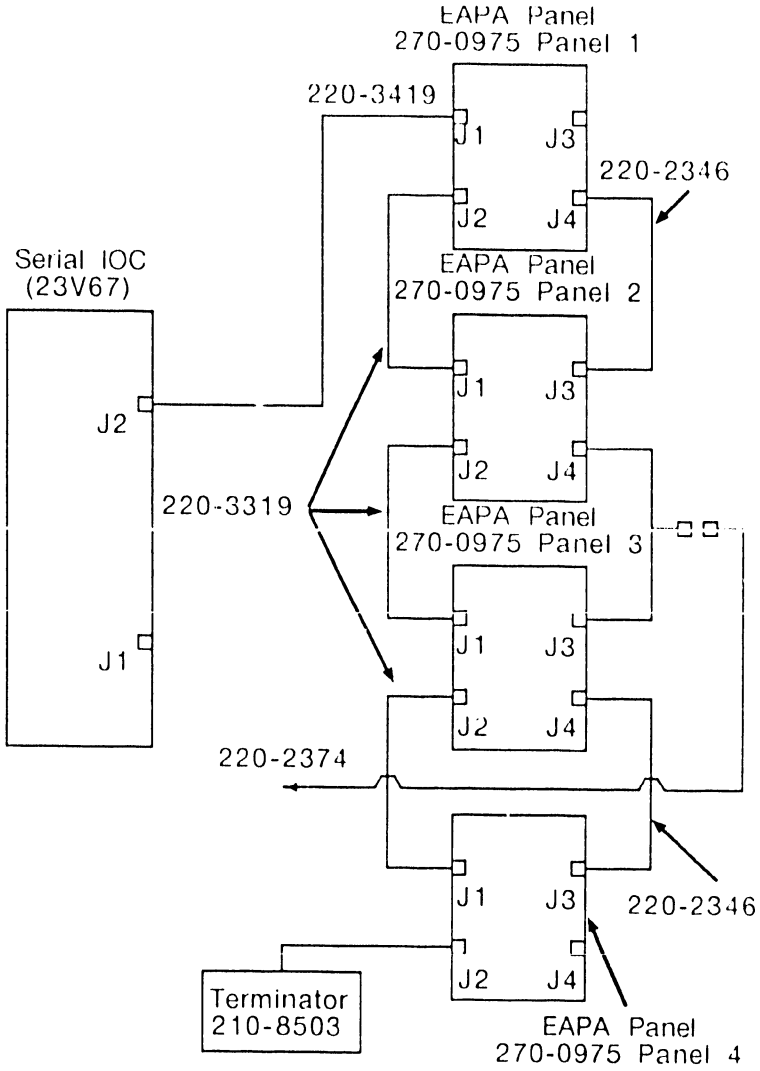

● END

9.10.2 6550 Gate Array TC (GATC) Panel Installation (Sheet 1 of 2)

6550 Gate Array TC panel provides a single TC protocol device (RS232, RS449, X.21 or RS366) via an EAPA 928-Type serial port connection. Only one protocol is supported at a time. Components required for 6550 Gate Array TC panel support are:

- 270-1016 Gate Array Assembly
- 220-2374 DC PDU Power Cable
- 220-2375 GATC Interconnect Power Cable

NOTE

GATC panel is a full panel. Two adjacent I/O panels must be removed for GATC panel installation

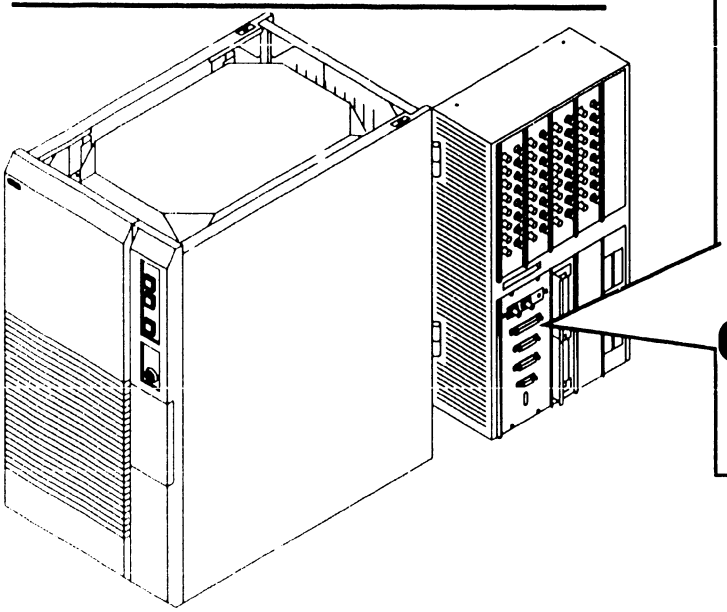

GATC Panel Installation

1. Remove two adjacent blank I/O panels from rear door. (➡7.2.28)
2. Verify proper switch positions and jumpers for protocol used. (➡7.2.29)

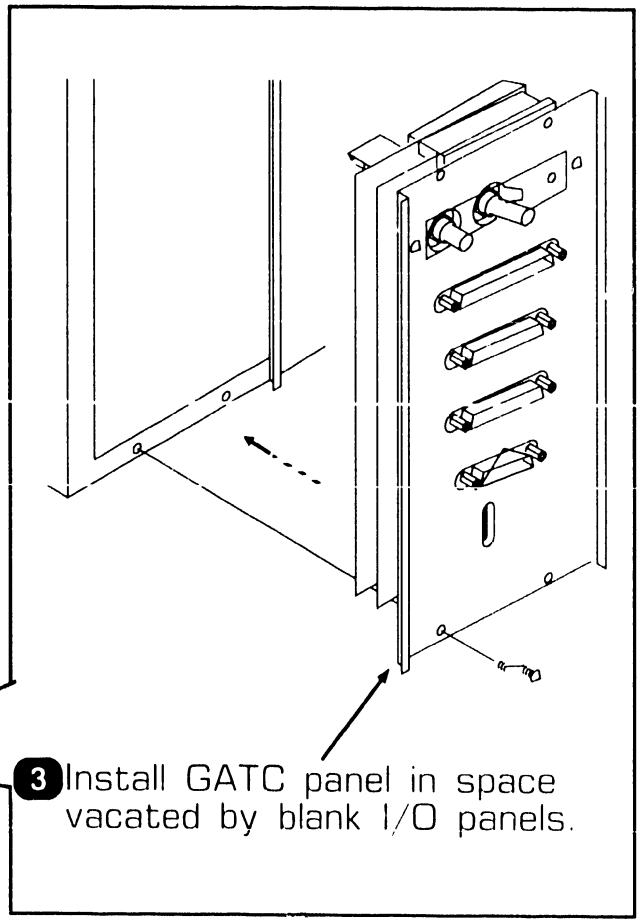

3. Install GATC panel in space vacated by blank I/O panels.

➡NEXT

.10.2 6550 Gate Array TC (GATC) Panel Installation (Sheet 2 of 2)

GATC Panel Cabling

1. Connect Interconnect Power Cable to GATC power connector J3.
2. Connect DC PDU Power cable from an available DC PDU connector to the Interconnect Power Cable.
3. Connect BNC/TNC cable from an EAPA connector (port) to GATC BNC/TNC connector.
4. Connect external TC signal cable to selected TC protocol connector.

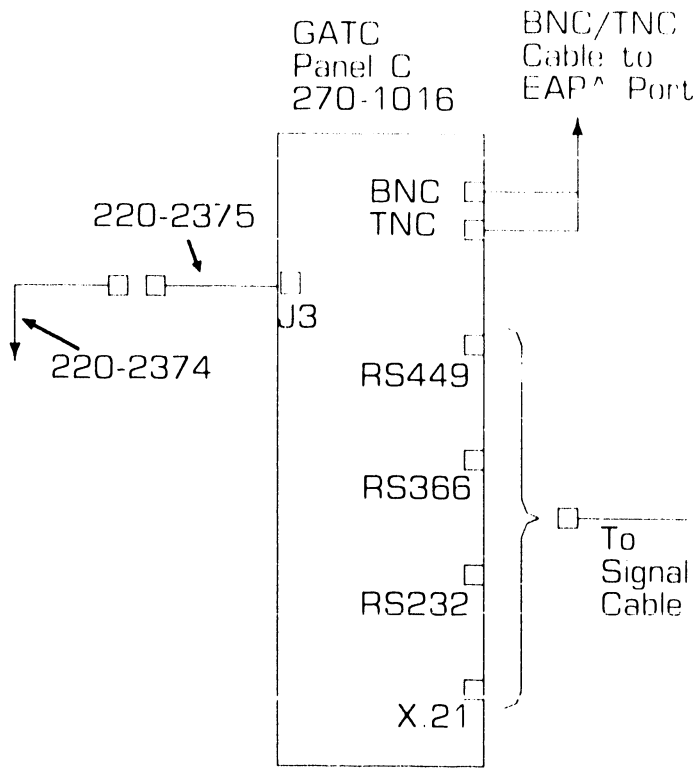

● END

9.10.3 Fiber Optic Panel (FOAPA) Installation

Fiber Optic panels can only be installed in the large cable concentrator. For Fiber Optic (FOAPA) installation, refer to VS Large Cable Concentrator manual 742-1706.

● END

9.10.4 WangNet P-Band Modem Installation

WangNet P-Band Modem can only be installed in the large cable concentrator. For WangNet P-Band Modem installation, refer to VS Large Cable Concentrator manual 742-1706.

● END

9.10.5 802.3 VS Interface Panel Installation

802.3 VS Interface panel can be installed in either the mainfra.e or the large cable concentrator. For 802.3 VS Interface installation refer to 802.3 VS Interface manual, 7742-1794.

● END

9.10.6 Wang Asynchronous Communications Sub-System (WACS) Installation

Wang Asynchronous Communications Sub-System (WACS) can be installed in either the mainframe or in the WACS cabinet. For WACS installation refer to Wang Asynchronous Communications Sub-System (WACS) manual, 742-1766.

● END

9.11 VS-7010 Main Memory Upgrades

NOTE

Memory Control Unit (MCU) main memory size selection jumper settings must be set to the corresponding memory board memory size. (➡7.2.10)

Main memory upgrades require the removal of the existing main memory board and the replacement of it with the memory upgrade board. Main memory upgrades available are:

Model Number	*Description*
UJ-3486	4 MB to 8 MB Memory
UJ-3507	4 MB to 16 MB Memory
UJ-3508	4 MB to 32 MB Memory
UJ-3509	8 MB to 16 MB Memory
UJ-3510	8 MB to 32 MB Memory
UJ-3511	16 MB to 32 MB Memory

● END

SECTION 10

FUNCTIONAL DESCRIPTION

SECTION 10 CONTENTS

SECTION 10

FUNCTIONAL DESCRIPTION

Page

10.1 INTRODUCTION 10-1

10.2 VS-7010 COMPUTER SYSTEM ARCHITECTURE 10-2

FUNCTIONAL DESCRIPTION

10.1 Introduction

The VS-7010 computer system is a high performance, high capacity business system that offers both integrated word processing and data processing capabilities. The VS-7010 supports up to 128 serial devices with a maximum of 96 workstations. An external Support Control Unit (SCU), featuring an independent 16-bit microprocessor unit, is used as a standard VS workstation and as a diagnostic processor to track system performance. The SCU can be located up to 25 feet from the mainframe. The following lists major features of the VS-7010 computer system:

- CP8-Based central processor with a high-speed processor system employing pipelined architecture.
- 32 Kbyte private, high-speed Cache memory incorporated into the central processor.
- High-speed Wang 7000 system bus design technology to interconnect all principle system components.
- 4, 8, 16, or 32 Mbyte main memory under the control of a Memory Control Unit (MCU).
- Serial IOC (as standard) providing 32 serial 928 data link ports.
- SMD Disk IOC (as standard) providing 4 external drive ports.
- Fan cooled 1850 watt multioutput switching power supply.
- Five I/O slots for optional IOCs to support a large number of peripheral devices and telecommunications lines. Telecommunication lines supported are RS232, RS366, RS449, and X.21 protocol.
- Ten half panel locations on the rear door for optional mounting of TC panels, disk panels, tape panels, and Large VS Cable Concentrator pass-through panels.
- An external Support Control Unit that contains a 360Kb 5-1/4 inch floppy drive and a 20Mb winchester drive.
- Optional IOCs include Telex Tape, Kennedy Tape, 8 port and 16 port Multiline TC, High Speed SMD IOC, and WACS IOC.

● END

FUNCTIONAL DESCRIPTION

10.2 VS-7010 Computer System Architecture (Sheet 1 of 6)

The VS-7010 computer system is a 14 slot system with 9 standard boards. The system comprises a processor section, main memory section, system bus interface section supporting up to 7 IOCs, and the SCU interface section.

Processor Section

The processor section contains the CP8 Central Processor Unit (CPU) board, Address Generation Unit (AGU) board, and Address Translation Unit (ATU) board, which comprises the pipeline architecture structure. The Central Processor Unit performs both integer and floating-point arithmetic, logical operations, and general instructions. The Central Processor executes register-to-register and memory-to-register macroinstructions in one CP cycle.

The Address Generation Unit provides prefetch instructions, decodes the instructions, and calculates the virtual addresses. Circuitry on the board provides the system's Real Time Clock (RTC) and Exponent Sign Unit (ESU). The RTC circuitry provides a 400 nanosecond based clock circuit for time of day clock and machine interval timing. The ESU circuitry provides an 8 byte x 8 bit data storage RAM that holds the macroinstruction exponent information required to perform exponent arithmetics, an ESU PROM that contains the ESU program, and ESU Control Registers. The ESU circuitry is started when a floating-point instruction is detected.

➡NEXT

10.2 VS-7010 Computer System Architecture (Sheet 2 of 6)

The Address Translation Unit translates the virtual addresses calculated by the CP and AGU into physical addresses, assists in page management, provides memory protection and Cache memory management, as well as provides the instructions and data fetching required for instruction and execution overlap. The Address Translation Unit contains a 1024 byte entry translation Cache and a 32 Kb private Cache memory used by the CP to minimize main memory access. Additional circuitry on the board provides Short Address Translation buffer and Reference and Change Table RAM.

The CPU, AGU, and ATU communicate the majority of their interconnecting signal through the backplane System Data Bus and System Address Bus. A 32-bit wide bi-directional D-Bus provides the main link between all three computing elements. In addition, a 50-pin ribbon cable is attached between each of these boards providing the following dedicated busses: 32-bit Virtual Address bus between the ATU and AGU and a 32-bit Buffered ALU Resultant Data bus between the CPU and AGU.

➡NEXT

10.2 VS-7010 Computer System Architecture (Sheet 3 of 6)

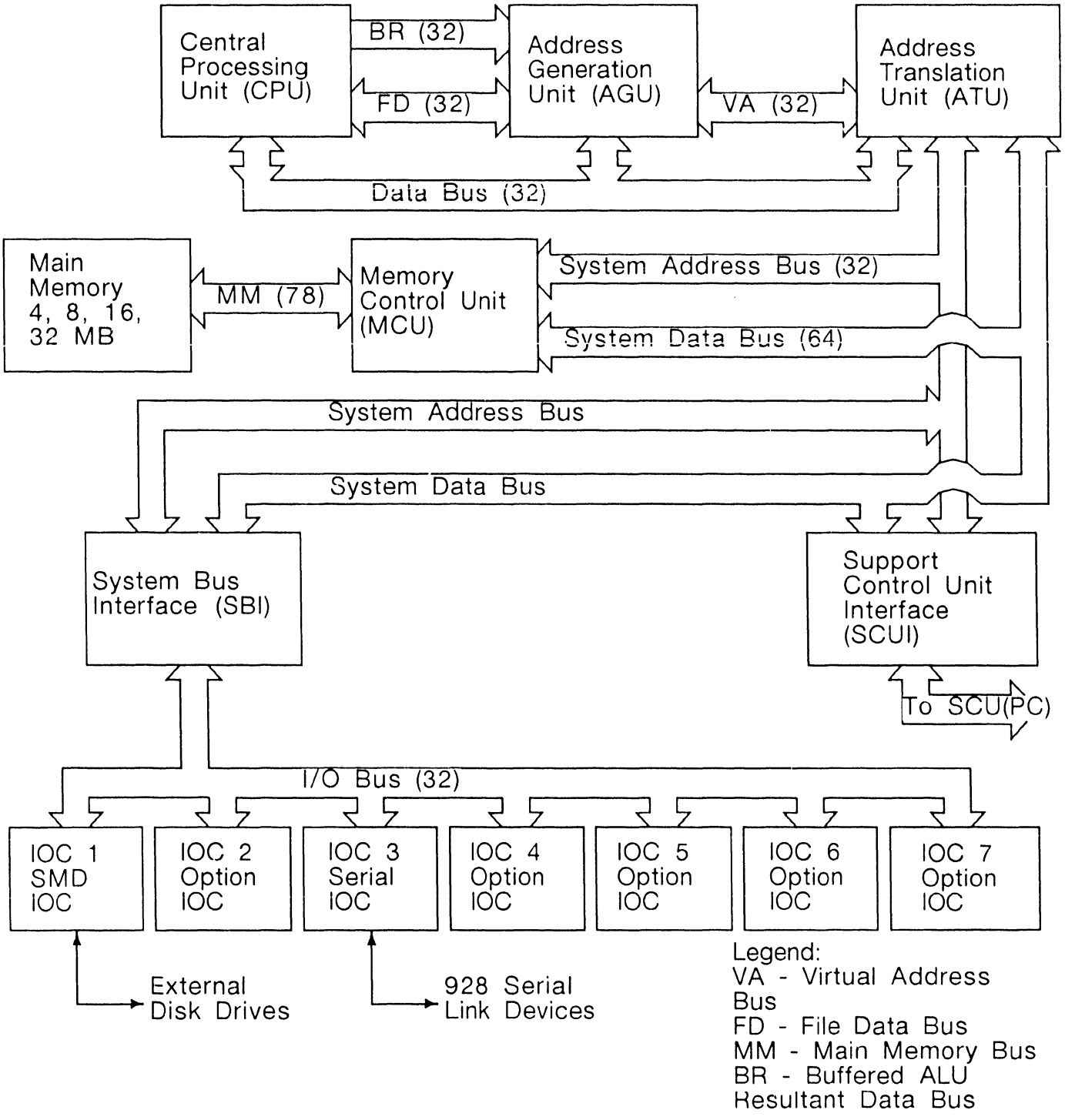

10.2 VS-7010 Computer System Architecture (Sheet 4 of 6)

Main Memory Section

The Main Memory section contains the Main Memory (MEM) board and the Memory Control Unit (MCU). The Memory Control Unit acts as the interface between main memory and the rest of the system, routes address and data information to and from main memory, contains the parity generation logic, decodes and executes all main memory commands, and performs main memory refresh. MCU to main memory write commands can be either doubleword (64 bits), word (32 bits), halfword (16 bits), or byte (8 bits). MCU to main memory read commands can be either word (32 bits), doubleword (64 bits), quadword (128 bits), or octal word (256 bits, 8 words). Parity generation is calculated and stored on every write to memory operation. On read operations, parity generation is again calculated and compared to the parity code bits stored during the write operation. If the parity bits calculated do not compare, a parity error is indicated.

Four memory size versions of Main Memory are available; 4 Mb, 8 Mb, 16 Mb, and 32 Mb. Only one Main Memory board is supported at a time. Main memory is divided into even and odd doubleword planes. A doubleword is defined as two 32-bit data words plus 7 ECC code bits per data word, for a total of 78 bits. The system alternates between the even and odd doubleword planes. Each plane is further divided into data arrays. A data array holds 1 megabyte of memory. Main Memory board is connected to the MCU via the 78-bit Main Memory bus. All data and address information is transmitted on the bus. Tristate buffers on the main memory board isolates and disconnects the Main Memory board from the bus when main memory is not being addressed.

➡NEXT

10.2 VS-7010 Computer System Architecture (Sheet 5 of 6)

ystem Bus Interface Section

ne System Bus Interface (SBI) section provides the interface between ne CP8 system bus and the I/O bus. ll major buses, except the 78-bit ain memory bus, are connected to ne System Bus Interface. The ystem Bus Interface board monitors ne buses and maintains the bus rror and status registers. All major BI data paths are latched on both put and output, thus increasing roughput by allowing simultaneous arallel operations. Command, ddress, and data are synchronized s they pass through the SBI. A directional System Data Transeiver connects the I/O subsystem the 64-bit System Data bus.

p to seven IOC's are supported on ne I O bus. The IOCs can be installed any available option I/O slot with ne exception of the first SMD IOC nd the first Serial IOC. The first MD IOC must be installed in I/O slot . The first Serial IOC must be stalled in I O slot 3. Each IOC is icroprocessor based and manages a ecific class of devices. Each IOC ntains three major functions:

I/O Controller Logic

I/O Arbitration Logic

Device Adapter Logic

I/O controller and I/O Arbitration logic are common to all IOCs. The Device Adapter logic is device dependant (i.e. TC, serial 928-type, SMD drive, tape drive). The IOCs contains 128K bytes of microcode RAM that is downloaded during system IPL.

➡NEXT

10.2 VS-7010 Computer System Architecture (Sheet 6 of 6)

Support Control Unit Interface (SCUI) Section

The Support Control Unit Interface is the interface between the SCU (Professional Computer) and the mainframe. Normally, the SCU (PC) drives all SCU operations. The SCUI provides the Support Packet Bus (SPB) link consisting of a 16-bit register that functions as a receiver and transmitter of SPB data and an 8-bit register that holds the command code and destination code for bus operations. The SPB bus is transmitted in a serial data stream and is converted to 24-bit parallel format on both ends. This concept allows the system to use existing backplane connectors, thus eliminating the need for an additional 24-pin connector. The SPB bus provides the following commands:

- Type of command
- Transmit SCU command
- Execute SCU command
- Receive Target response
- Set up registers and issue command to start system bus operation

The SCU (Professional Computer) has direct access to the mainframe Central Processor, Memory Control Unit, and System Bus Interface. The SCU is an external device that can be located up to 25 feet away from the mainframe and serves as the system console. The SCU provides the following functions:

- Loads system microcode and diagnostic code.
- Provides Initial Program Load.
- Provides local and remote system administration.
- Provides memory dump operations.
- Provides Local and remote maintenance support.
- Provides standard VS workstation operations.

During IPL, the SCU will pass the real time and date (if selected) to the mainframe. The SCUs PCI interface board contains a battery backed up real time clock circuitry. The time and date is entered into the SCU PCI Interface real time clock circuitry during system initialization.

● END

SECTION
11
SPECIFICATIONS

SECTION 11 CONTENTS

SECTION 11

SPECIFICATIONS

Page

11.1 HARDWARE 11-1
11.1.1 VS-7010 Mainframe 11-1
11.1.2 VS-7010 Architecture 11-2
11.1.3 Multioutput Power Supply Specifications 11-3

11.2 OPERATING SYSTEM SOFTWARE 11-4

11.3 DIAGNOSTICS 11-5
11.3.1 VS-7010 Built-In Test (BIT) Programs 11-5
11.3.2 Diagnostic Tests 11-6

11.1 Hardware SPECIFICATIONS

11.1.1 VS-7010 Mainframe

Computer System Dimensions:

Depth: 31.0 inches (78.74 cm)
Width: 15.3 inches (39.0 cm)
Height: 30.5 inches (77.5 cm)

Computer System Weight:

220 pounds (100 Kg) Maximum Configuration

Installation Requirements:

Front Clearance: 36 inches (91.4 cm)
Rear Clearance: 36 inches (91.4 cm)
Left Side Clearance: 24 inches (60.9 cm)
Right Side Clearance: 36 inches (91.4 cm)
Top Clearance: 36 inches (91.4 cm)
Position: Upright Only

Power Requirements:

Dedicated circuit, 30 Amps Breaker
208 - 240 Vac (208 Vac nominal)
60 Hz ±0.5 (60 Hz nominal) (Domestic)
50 Hz ±0.5 (50 Hz nominal) (International)
Start-Up - 12.0 Amps RMS @ 208 Vac (2496 volt-amps)
NEMA Receptacle L14-30IGR
NEMA Plug L14-30P
Hubbel Receptacle IG2710
Hubbel Plug 2711

Environmental Requirements:

Relative Humidity:
20% - 80% non-condensing
Ambient Temperature:
60° - 90°F (15.5 - 32° C)
Max Temp Gradient:
12°F/Hr (4°C/Hr)
Max Wet Bulb Temp:
75°F (24°C)
Max Altitude:
10,000 Ft (3048 M)
Heat Dissipation:
6304 BTU/Hr, (1554 KCal/Hr)

● END

11.1.2 VS-7010 Architecture

Memory Cycle Time:

240 nSeconds Instruction Execution (Typical)
420 nSecond Memory Access (8-byte read)
540 nSecond Memory Access (16-byte read)
900 nSecond Memory Access (32-byte read)
120 nSecond Memory Access (8-byte write)

Memory Size:

4, 8, 16, or 32 MB
Cache Memory 32KB

Virtual Address Space/User 8MB
Virtual Address Space/Process 8MB

System Data Path:

CPU 32-bit
I/O 32-bit
Main Memory 64-bit
Word Length 32-bit

Bandwidth:

System Bus 66.6 MB/second
I/O Bus 33.3 MB/second

Number of Users:

96 Concurrent Serial Workstations
128 Concurrent Serial Workstations and Printers

Number of Processes:

Concurrent 255
Background 63

Maximum Drives/Tapes:

Maximum Disk Storage 5.4 GB

12 Disk Drives @ 1.8 MB/second Data Rate

● END

11.1.3 Multioutput Power Supply Specifications

Output Voltages:

+5Vdc:

Adjustment Range: 4.96 to 5.04 Volts
Output Current: 275 Amps
AC Ripple: 35mV RMS (50mV Pk-Pk)

+12 Vdc:

Adjustment Range: 11.96 to 12.04 Volts
Output Current: 20 Amps
AC Ripple: 35mV RMS (50mV Pk-Pk)

-5 Vdc:

Adjustment Range: -4.96 to -5.04 Volts
Output Current: 10 Amps
AC Ripple: 35mV RMS (50mV Pk-Pk)

-12 Vdc:

Adjustment Range: -11.96 to -12.04 Volts
Output Current: 10 Amps
AC Ripple: 35mV RMS (50mV Pk-Pk)

Power Dissipation:

Steady State:
1850 Watts, 6304 BTU Hr

● END

11.2 Operating System Software

Software	*Version*	*Comments*	*Part Number*
Operating System	7.14	9-Track Magnetic Tape	195-5505-7
VS-7010 SCU	1.05.02	Contains CP8 CPU microcode and DCS package	195-4682-9

● END

11.3 Diagnostics

11.3.1 VS-7010 Built-In-Test (BIT) Programs

Diagnostic Name	*PROM Rev.*	*Package P/N*
928 Serial IOC	5684 1	295-4721-D
SMD Disk IOC	56A4 2	295-4724-D
Kennedy Tape IOC	5684 1	295-4730-D
Telex Tape IOC	5684 1	295-4731-D
Multiline TC IOC	5724	295-4729-DC

NOTE

Complete 295 package part numbers include PROMS and documentation.

● END

11.3.2 Diagnostic Tests

Diagnostic Name	*Release*	*Package P/N*
Uniboot (Boot Loader)	846C	295-2479-3
FTU Off-Line	6385	295-2759-3
VOLCOPY	8181	702-0122-A
TCTESTER	6660	295-5181-5

NOTE

Complete 295 package part numbers include diskettes and documentation.

Diskette only part numbers (702 prefix) are shown if no package part numbers are available.

● END

SECTION 12
ILLUSTRATED
PARTS

SECTION 12 CONTENTS

SECTION 12

ILLUSTRATED PARTS

Page

12.1 MAJOR ASSEMBLIES 12-1

12.2 VS-7010 SUBASSEMBLIES 12-2
12.2.1 VS-7010 Computer System Covers 12-2
12.2.2 VS-7010 Computer Chassis 12-4
12.2.3 VS-7010 Computer Card Cage 12-6
12.2.4 VS-7010 Rear Panel Assembly 12-8

12.3 SUPPORT CONTROL UNIT SUBASSEMBLIES 12-10
12.3.1 SCU Professional Computer 12-10
12.3.2 SCU PM004L Monitor (279-0659) 12-12

12.4 VS-7010 POWER INTERCONNECT 12-14

12.5 CABLE ASSEMBLIES 12-16
12.5.1 Standard Cable Assemblies 12-16
12.5.2 Optional Cable Assemblies 12-18

12.1 ILLUSTRATED PARTS
Major Assemblies

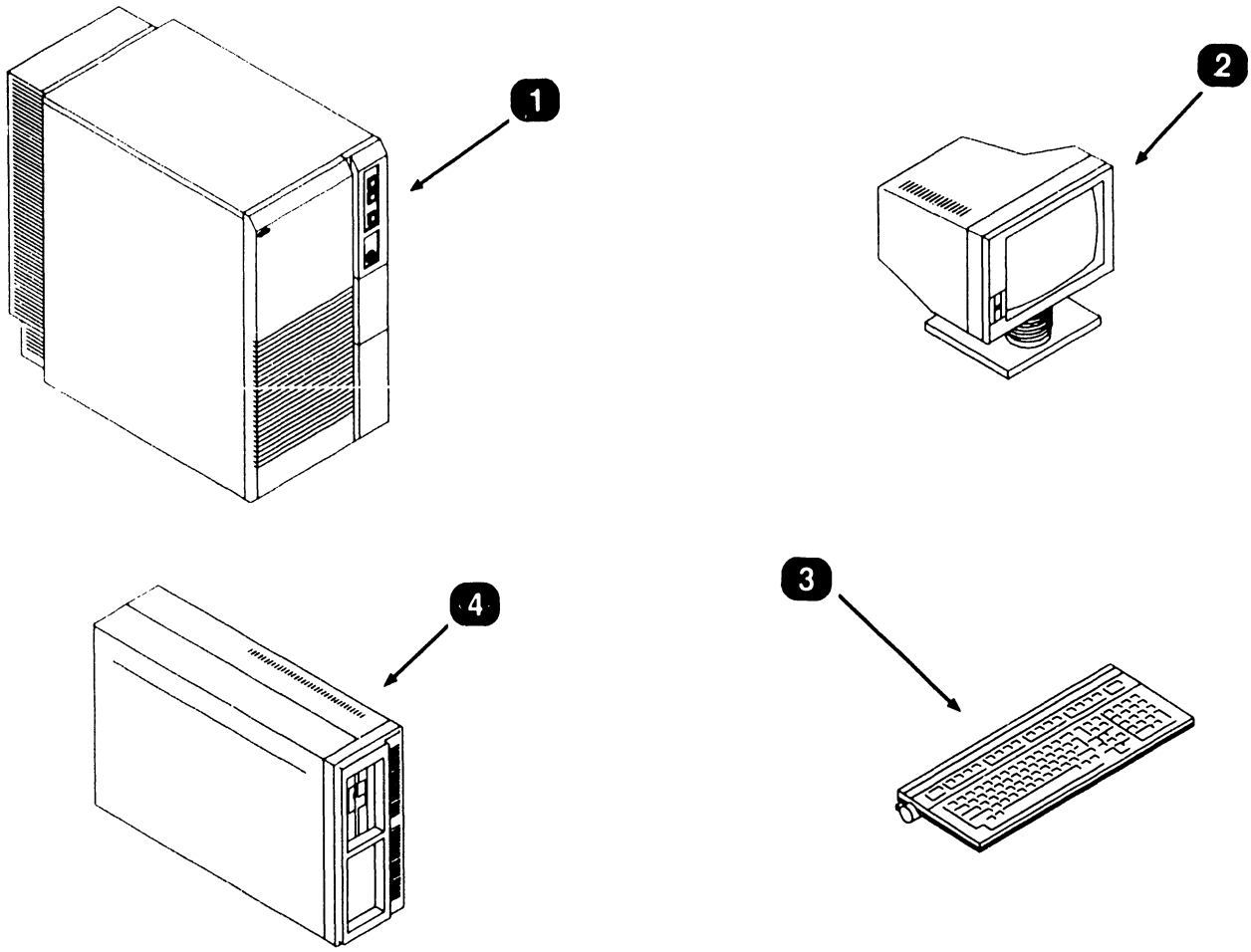

Item	*Part Number*	*Description*
1	177-7537	VS-7010 Computer System, 4MB Main Memory
2	279-0659	SCU PM004L Monochrome Monitor
3*	725-3099-US	SCU Keyboard, Universal Low Profile
4	187-7536	SCU Professional Computer

* = Field Replaceable Item

● END

12.2.1 VS-7010 Computer System Covers (Sheet 1 of 2)

Item	*Part Number*	*Description*
1	458-3971	Cover, Top
2	458-3827	Frame Weldment
3	458-3294	Panel, Left Side
4	655-0060	Casters, Rigid
5	655-0061	Casters, Swivel
6*	660-1107	Air Filter, Foam
7	270-1104	Front Panel Assembly
8	458-3293	Panel, Right Side

* = Field Replaceable Item

➡NEXT

12.2.1 VS-7010 Computer System Covers (Sheet 2 of 2)

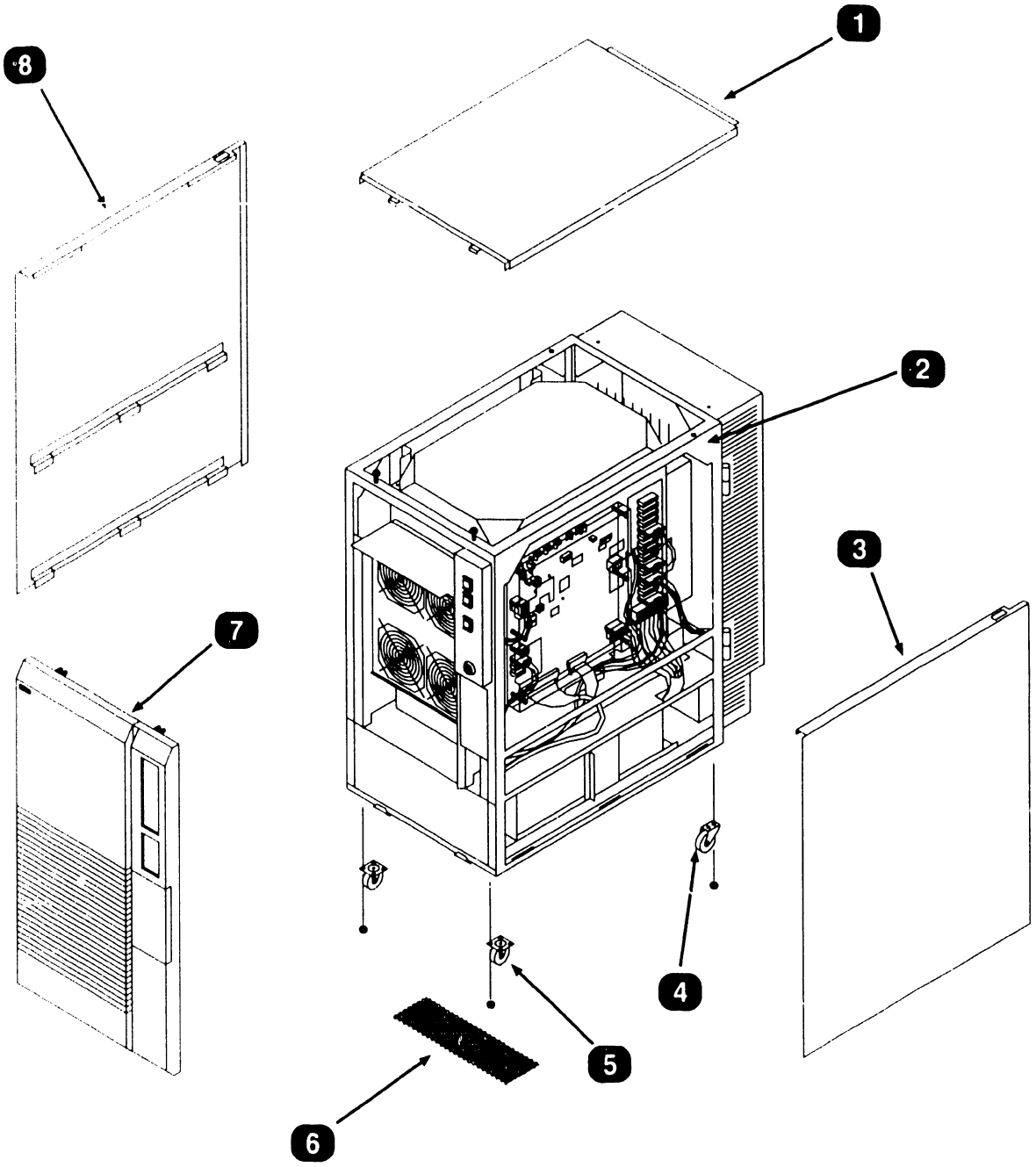

● END

12.2 VS-7010 Subassemblies

12.2.2 VS-7010 Computer Chassis (Sheet 1 of 2)

Item	*Part Number*	*Description*
1	458-3636	Guide, Cable
2*	210-8809	Power Supply Controller Board
3*	210-8816	DC Power Distribution Unit (DC PDU)
4	452-4749	Shield, Power Supply Controller
5*	270-1100	Multioutput Power Supply Assembly
	725-3308-1	Multioutput Power Supply
	270-3450*	DC Power Harness
	220-2643*	Cable, Control Board Multiple Output
	220-2296*	Cable, AC PDU to Power Supply
	458-1991	Bus Bar, Lower Positive
	458-1992	Bus Bar, Lower Ground
	451-5593	Bracket, Power Supply Mounting
6	458-3831	Panel, Bottom Dress, PS Access
7*	270-1099	Control Panel Assembly
	220-3538	Cable, Control Panel; 26-position Soc
	325-1037	Keylock, Rotary 4-position
	325-2261	Pushbutton Switch; 12V Lamp, Red Lens
	325-2262	Pushbutton Switch; 12V Lamp, Green Lens
	325-2264	Pushbutton Switch; 12V Lamp, Yellow Lens
		Lamp, 12V, Pushbutton Switch

* Field Replaceable Item

➡NEXT

12.2.2 VS-7010 Computer Chassis (Sheet 2 of 2)

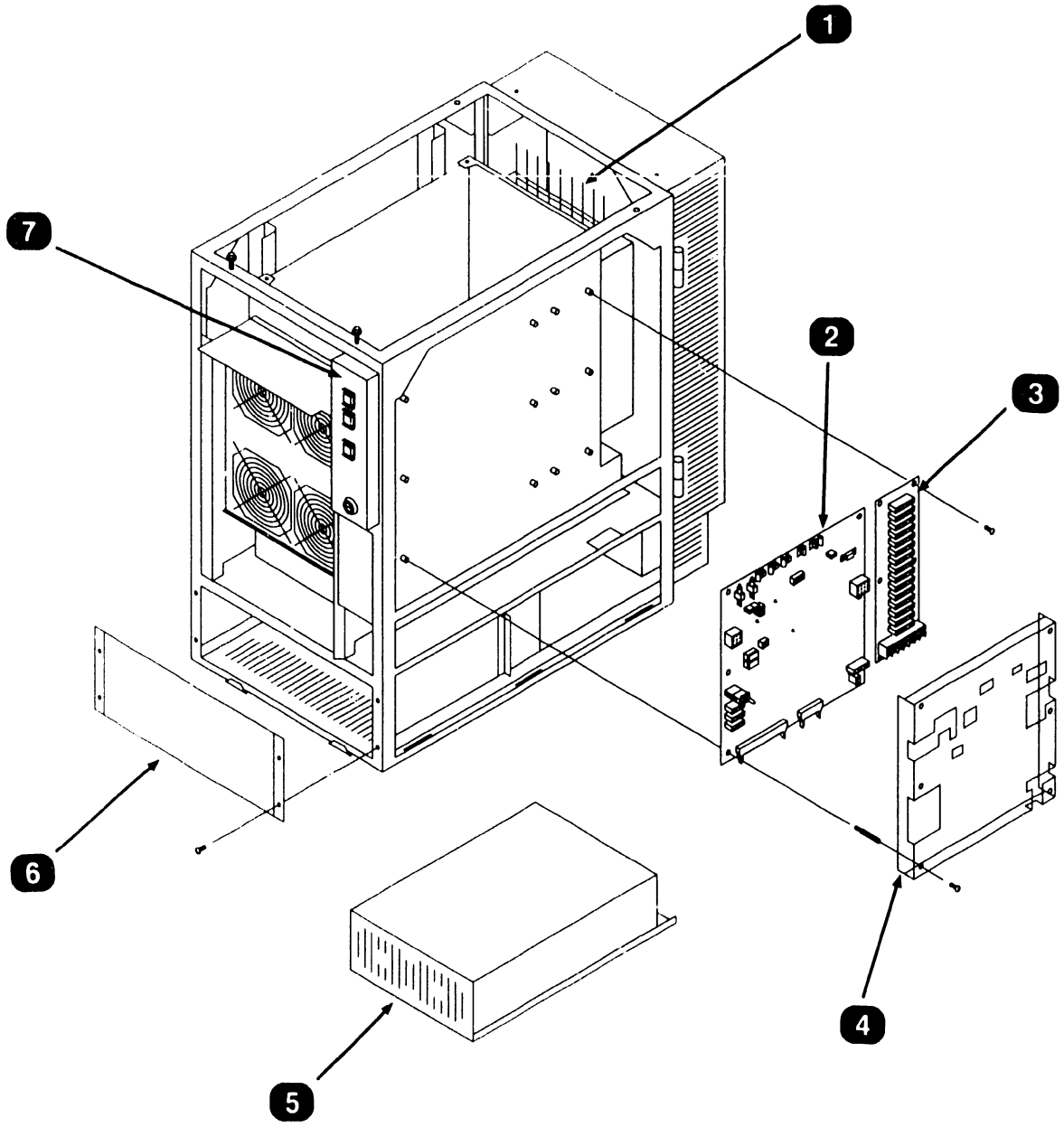

● END

12.2 VS-7010 Subassemblies

12.2.3 VS-7010 Computer Card Cage (Sheet 1 of 2)

Item	*Part Number*	*Description*
1	449-1467	Cover, Card Cage
2*	210-8785-A	SMD IOC (23V98-1)
3*	210-9809-A	Serial IOC (23V67)
4*	210-8835	Support Control Unit (SCU)
5*		Optional Controller Boards:
	210-8790-A	Kennedy Tape IOC (23V95-1)
	210-8491-A	Multiline TC Controller IOC (23V96)
	210-8789-A	Telex Tape IOC (23V95-2)
	210-8829-A	High-Speed SMD IOC (W/Cache) (70V98-4A)
6*	270-1103	Backplane Assembly
	210-9847	Motherboard
	458-1989	Bus Bar, Upper Ground
	458-1990	Bus Bar, Upper Positive
7*	210-9836-1	System Bus Interface (SBI)
8*	210-8703	Main Memory, 4 MB
	210-8703-1	Main Memory, 8 MB
	210-9874	Main Memory, 16 MB
	210-9874-1	Main Memory, 32 MB
9*	210-9834	Memory Control Unit (MCU)
10*	210-9833-A	Address Translation Unit (ATU)
11*	210-9832-A	Address Generation Unit (AGU)
12*	210-9838-A	Central Processing Unit (CPU)

* Field Replaceable Item

➡NEXT

12.2.3 VS-7010 Computer Card Cage (Sheet 2 of 2)

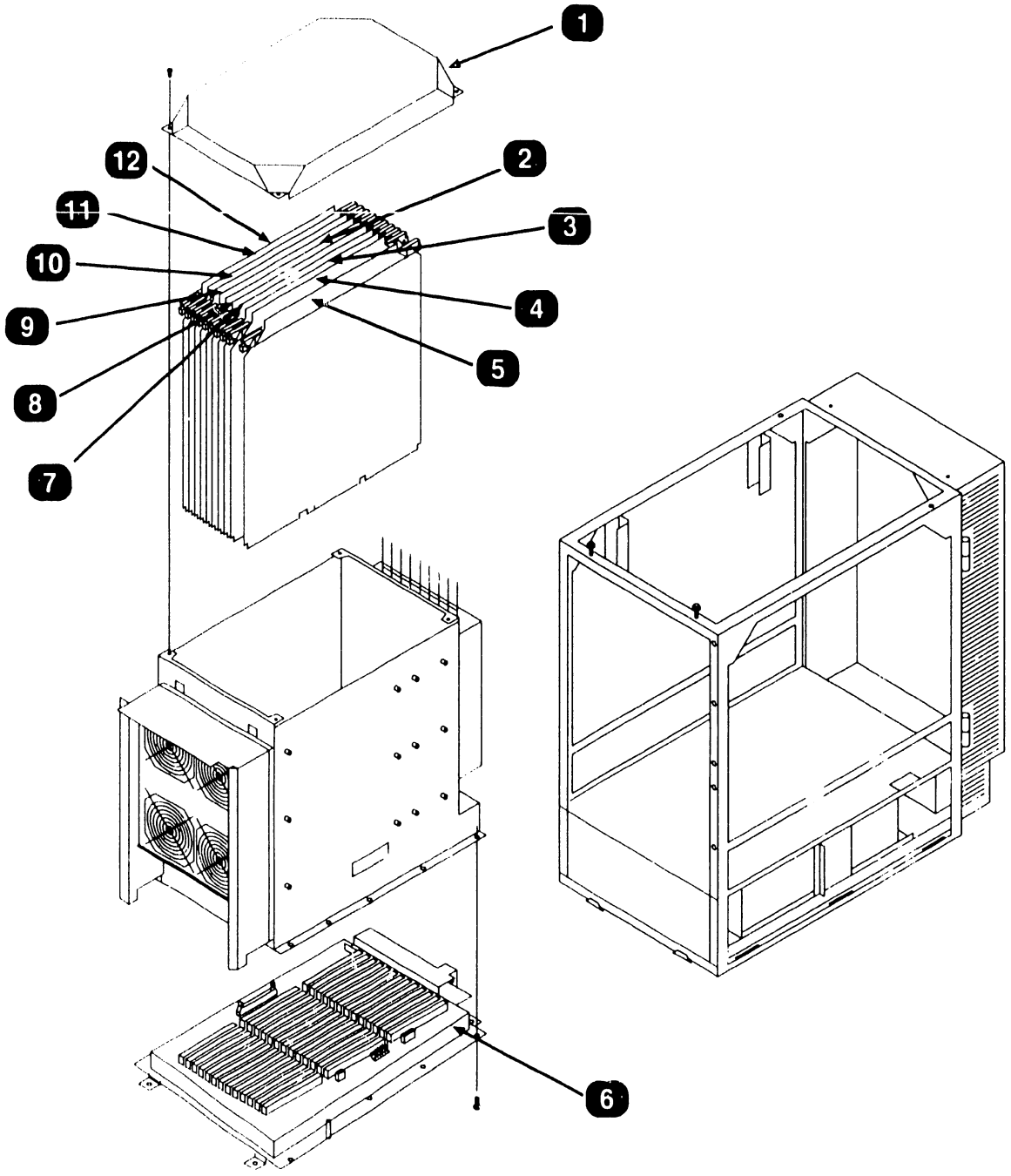

● END

12.2.4 VS-7010 Rear Panel Assembly (Sheet 1 of 2)

Item	*Part Number*	*Description*
1*	270-0975	Electrical APA, 4 each
2*	270-3451	DC Fans, 4 each
	220-2644*	Cable, DC PDU to Rear Housing Terminal Block
3	449-1467	Cover, Card Cage
4	270-1102	Card Cage Assembly
5	447-0018	Shield, Bus Bar
6	270-1011	AC PDU Assembly
7	478-1202	Blank Half Panel
	452-4880	Panel, Cable Concentrator
	270-1110	Kennedy Tape I/O Assembly
	270-1109	Telex Tape I/O Assembly
	270-1016*	Gate Array TC Panel
	270-1111	Multiline I/O Panel (With 4 RS-232 Ports)
	270-1108	Multiline I/O Panel (Requires Interface Modules)
	270-1093*	RS232 Interface Module, or
	270-1011*	RS366 Interface Module, or
	270-1012*	RS449 Interface Module, or
	270-1013*	X.21 Interface Module
8	272-0054	SMD I/O Panel Assembly
		220-3544 'B' Cable (2 each)
		220-3545 'B' Cable (2 each)
		220-3546 'A' Cable

* = Field Replaceable Item

➡NEXT

12.2.4 VS-7010 Rear Panel Assembly (Sheet 2 of 2)

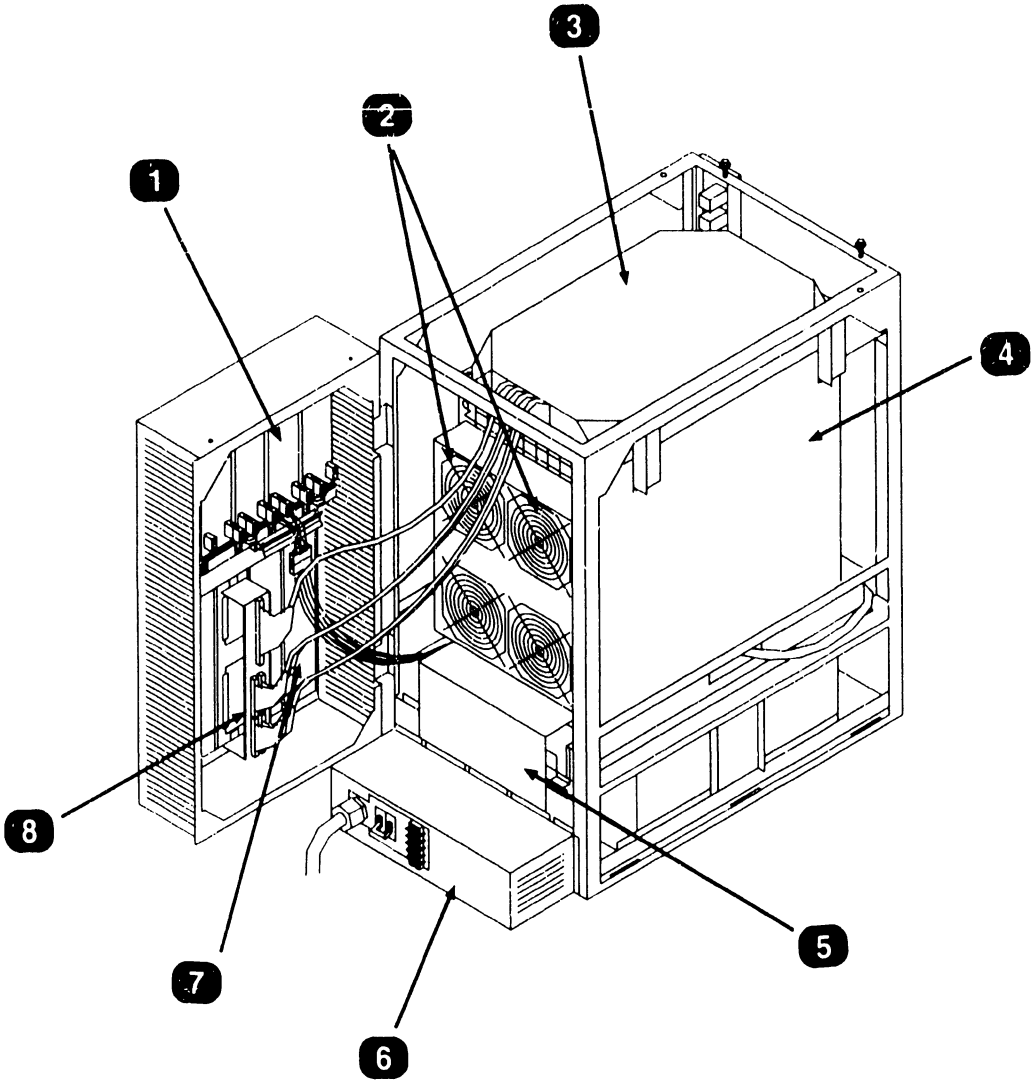

● END

12.3.1 SCU Professional Computer (Sheet 1 of 2)

Item	*Part Number*	*Description*
1*	210-9521-2C	CPU/System Board (512K), VS-7010 Unique
2	458-3299	Enclosure, CPU
3	449-0748	Bezel, CPU
4	452-0342	Plate, Drive Mounting
5	449-0837	Adapter, Half Height D e
6*	725-0142	Diskette Drive, 360KB Half Height
7*	278-4062	Winchester Disk, 20MB
8*	220-3240	Cable, Winchester 'A' Data
9*	220-3328	Cable, Winchester 'B' Control
10*	220-3239	Cable, Floppy Drive
11	458-3329	Chassis, CPU
12*	270-1033	Power Supply, SPS200
13*	420-2040	AC Power Cord
14	210-9237	Motherboard
15*	210-9025-A	Winchester Controller
16	458-3835	Shield, RF
17*	210-8310-A	Single Board Local Communications Controller
18*	210-9848	External PCI Controller
19*	210-9443-A	PC Emulator (Display Controller)
20	449-0753	Hold Down, PCA

* Field Replaceable Item

➡NEXT

12.3 Support Control Unit Subassemblies

12.3.1 SCU Professional Computer (Sheet 2 of 2)

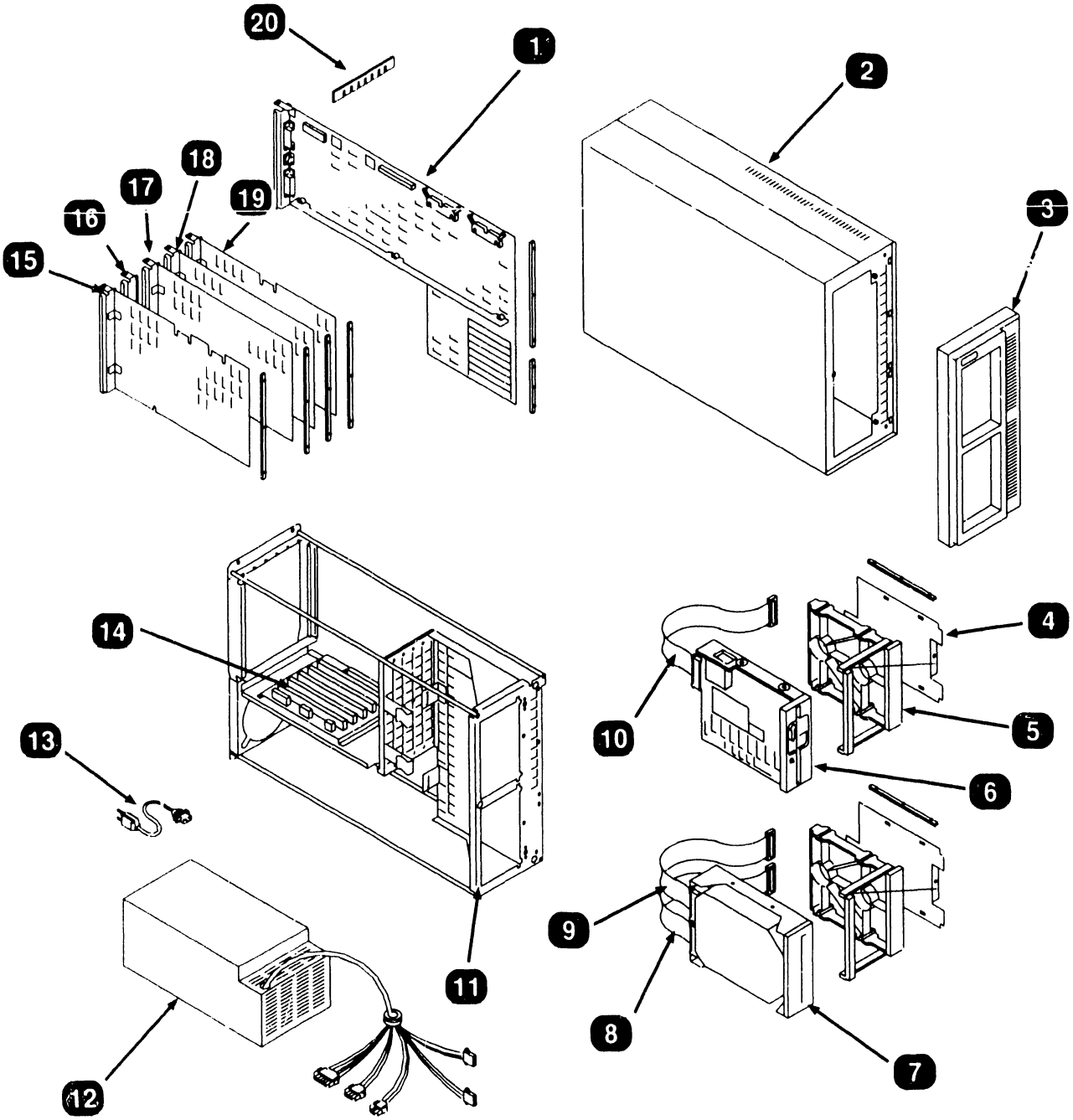

● END

12.3.2 SCU PM004L Monitor [279-0659] (Sheet 1 of 2)

Item	*Part Number*	*Description*
1	449-1065	Cover, PM004L Monitor
2	220-2311	Cable Assembly, Grounding
3	340-0115	Tube, C/R 12 inch
4	449-1064	Bezel, Monitor
5	650-9081	Screw, 1/4-28 x 1-1/2 inch hex head
6	449-1066	Actuator, Slide
7	449-0952	Bellow, Sleeve
8	449-0626	Collar, Ball Joint
9	478-0805	Ball Joint
10	449-1067	Base, Monitor
11	449-0625	Cap, Spring
12	652-0064	Stop Nut, 1/4-28
13	220-0491 220-0495	Cable Assembly, 4 feet 4 inch Cable Assembly, 8 feet 8 inch
14*	210-8514	PCB, Monitor Electronics
15	320 0132	Yoke Assembly (Less Magnets)

* Field Replaceable Item

➡NEXT

12.3.2 SCU PM004L Monitor [279-0659] (Sheet 2 of 2)

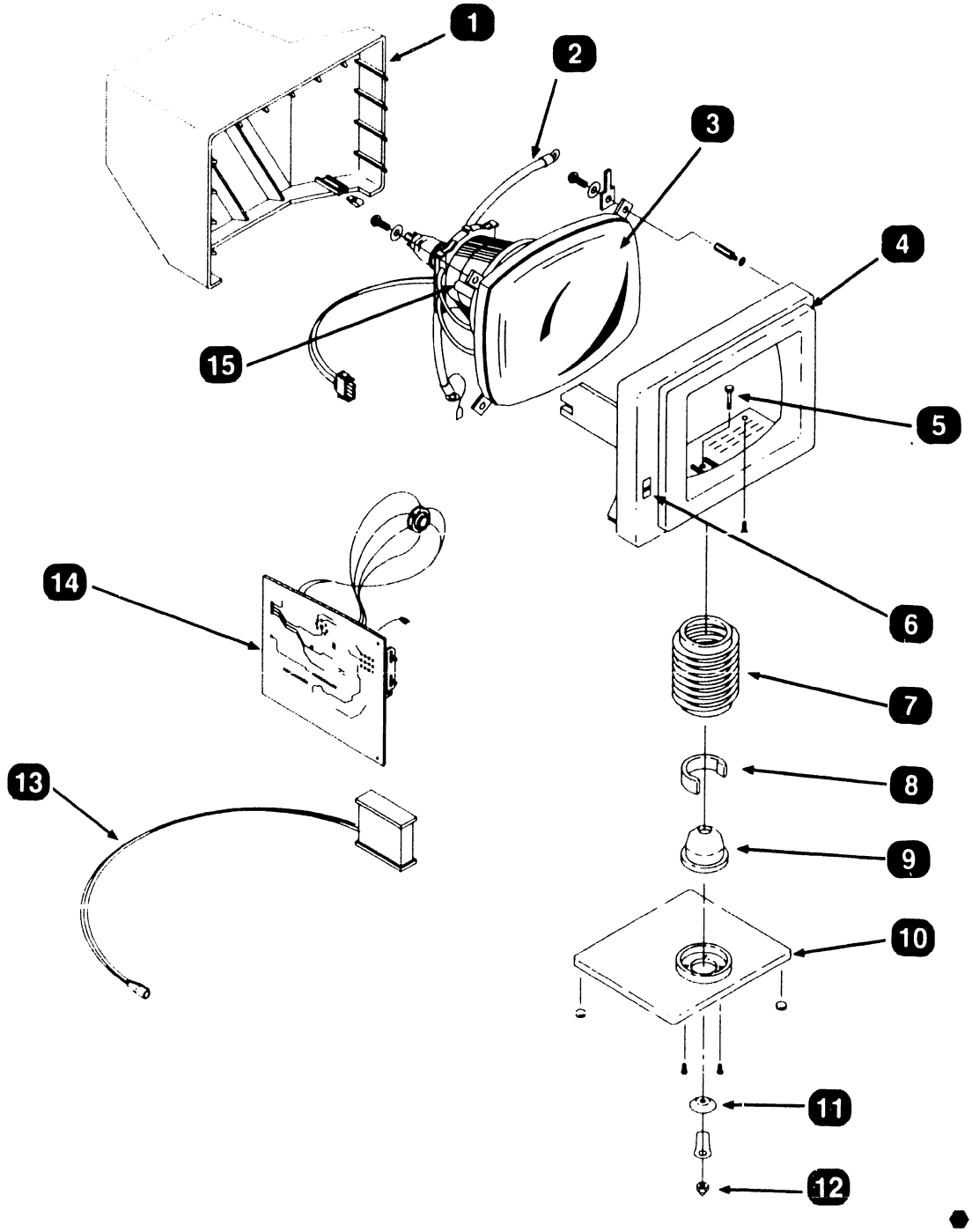

● END

12.4 ILLUSTRATED PARTS
VS-7010 Power Interconnect (Sheet 1 of 2)

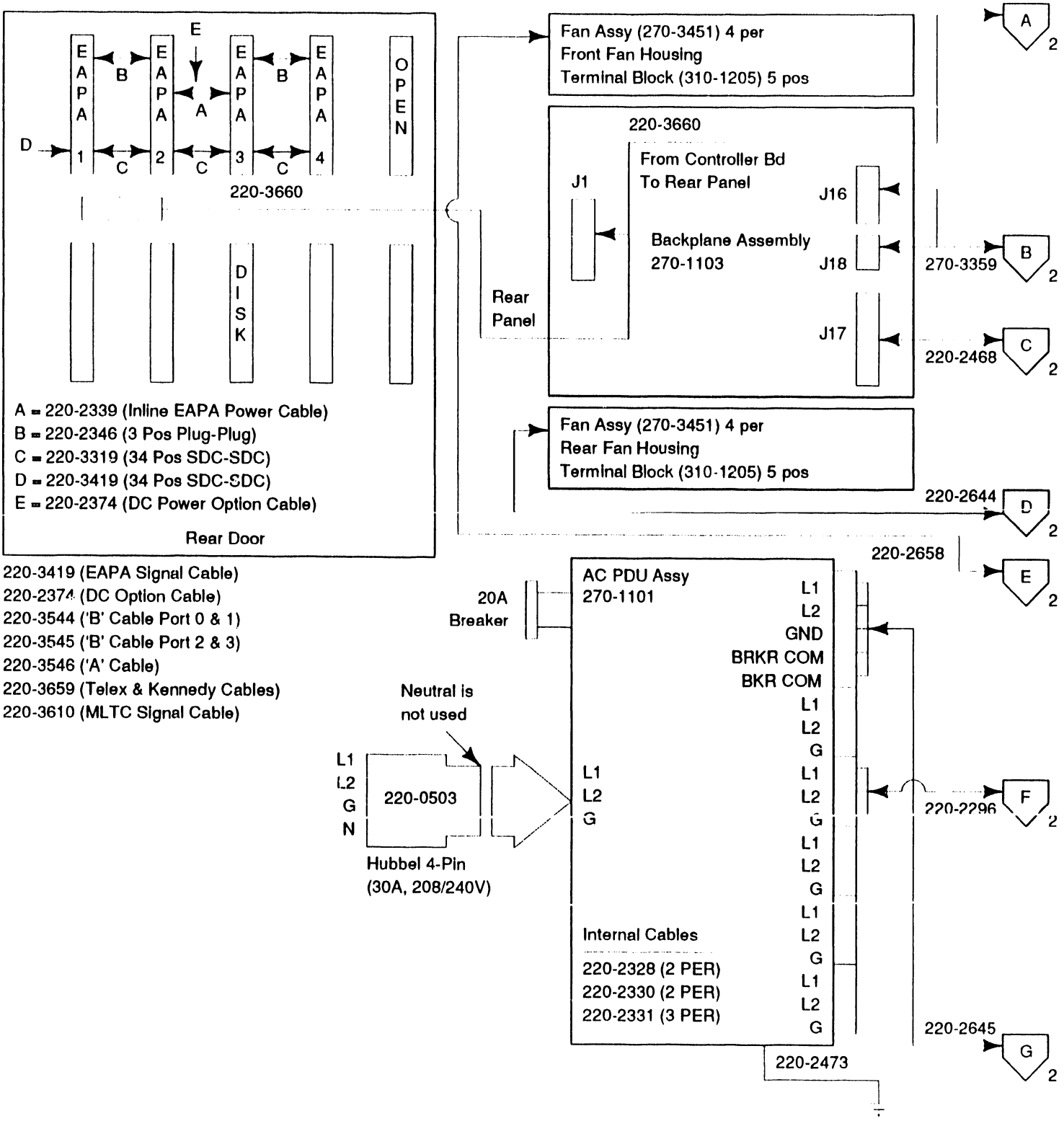

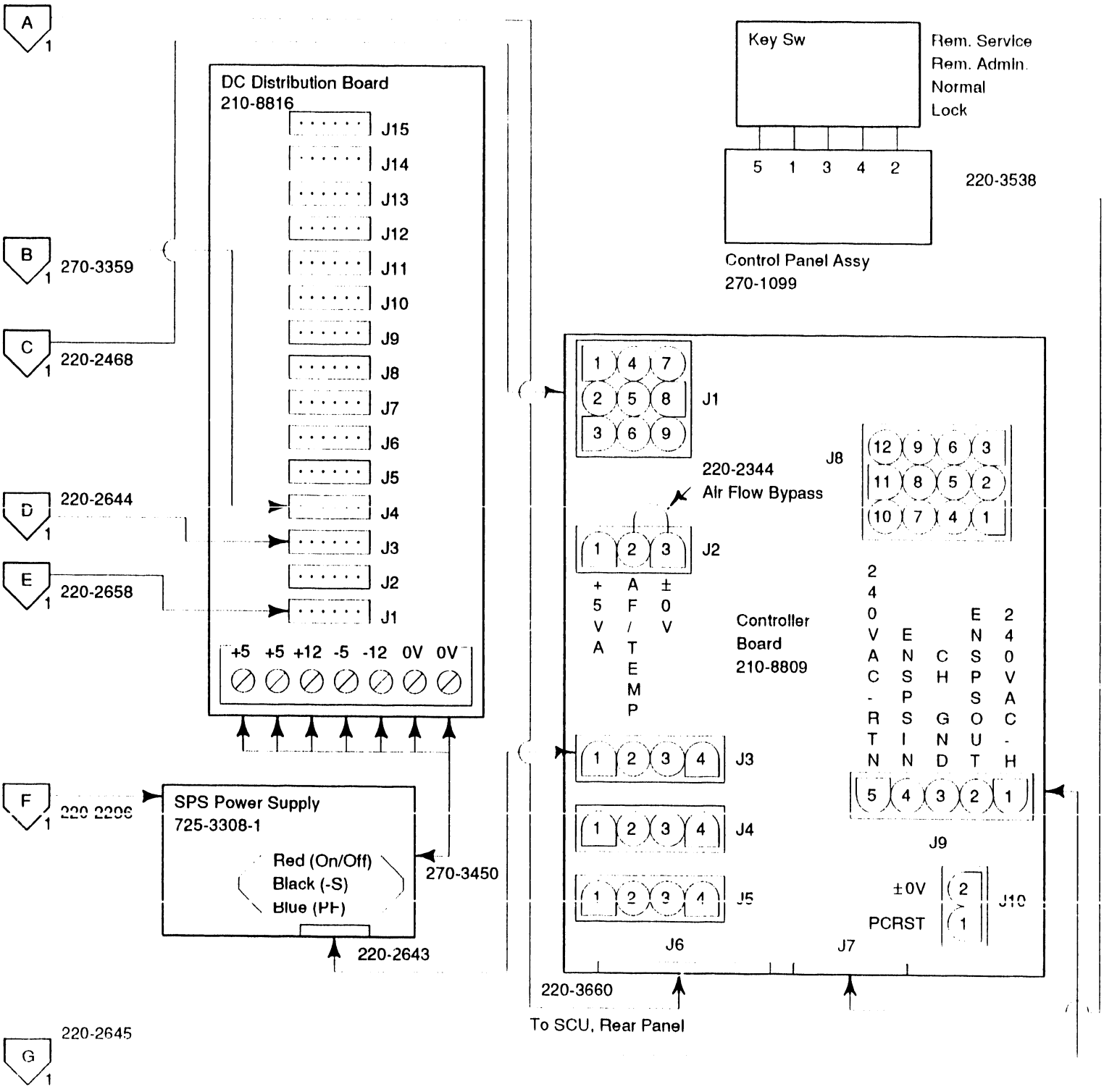
A
1
B
1
270-3359
C
1
220-2468
D
1
220-2644
E
1
220-2658
F
1
220-2296
G
1
220-2645
DC Distribution Board
210-8816
J15
J14
J13
J12
J11
J10
J9
J8
J7
J6
J5
J4
J3
J2
J1
+5 +5 +12 -5 -12 0V 0V
SPS Power Supply
725-3308-1
Red (On/Off)
Black (-S)
Blue (PF)
270-3450
220-2643
Key Sw
Rem. Service
Rem. Admin.
Normal
Lock
5 1 3 4 2
220-3538
Control Panel Assy
270-1099
1 4 7
2 5 8
3 6 9
J1
220-2344
Air Flow Bypass
J8
12 9 6 3
11 8 5 2
10 7 4 1
1 2 3
J2
+5VA
AF/TEMP
±0V
Controller
Board
210-8809
240VAC-RTN
ENCH GND
ENS SPS
240VAC-H
1 2 3 4
J3
1 2 3 4
J4
1 2 3 4
J5
5 4 3 2 1
J9
±0V
PCRST
2
1
J10
J6
J7
220-3660
To SCU, Rear Panel

12.5 Cable Assemblies

12.5.1 Standard Cable Assemblies (Sheet 1 of 2)

Cable P/N	*Source*	*Destination*
220-0503	208/240V AC Power Receptacle	Mainframe AC PDU
220-2296	AC PDU Connector	Power Supply
220-2339	In-Line EAPA Power 'Y'	EAPA Power Connectors
220-2346	EAPA Power Connector	Adjacent EAPA Power Connector
220-2374	DC PDU Connector	Rear Door Option Panels
220-2468	Motherboard	Power Supply Controller Board J1
220-2473	AC PDU Ground	Chassis Ground Stud
220-2643	Power Supply (On/Off)	Power Supply Controller Board J3
220-2644	DC PDU Connector	Rear Fan Housing Terminal Block
220-2645	AC PDU Connector	Power Supply Controller Board J9
220-2658	DC PDU Connector	Front Fan Housing Terminal Block
220-3319	EAPA Signal Connector	Adjacent EAPA Signal Connector
220-3419	Serial IOC Connector J2	First EAPA Signal Connector
220-3472	IOC 50-Pin Connector (CPU-to-AGU, AGU-to-ATU)	Adjacent IOC 50-Pin Connector

➡NEXT

12.5.1 Standard Cable Assemblies (Sheet 2 of 2)

Cable P/N	*Source*	*Destination*
220-3538	Control Panel Assembly (Part of Assembly 270-1099)	Power Supply Controller Board J9
220-3660	Power Supply Controller J6	Motherboard/Rear Panel SCU Port
270-3359	DC PDU Connector	Motherboard Connector
270-3450	Power Supply DC Harness	DC PDU Terminal Block
220-2344	Power Supply Controller J3 (Part of Power Supply Controller Board)	
420-2040	120V AC Power Receptacle	SCU (PC) Power Supply
220-0606	Mainframe SCU Interface Port (Standard 10 foot cable)	SCU (PC) SCU Interface Board
220-0607	Mainframe SCU Interface Port (Optional 25 foot cable)	SCU (PC) SCU Interface Board

● END

12.5 Cable Assemblies

12.5.2 Optional Cable Assemblies

Cable P/N	*Source*	*Destination*
220-3546	SMD IOC Connector J5	SMD Panel Data 'A' Cable
220-3544	SMD IOC Connector J4	SMD Panel Control Port 0 'B' Cable
220-3544	SMD IOC Connector J3	SMD Panel Control Port 1 'B' Cable
220-3545	SMD IOC Connector J2	SMD Panel Control Port 2 'B' Cable
220-3545	SMD IOC Connector J1	SMD Panel Control Port 3 'B' Cable
220-3659	Telex/Kennedy IOC (50-Pin Cable Soc-Soc)	Kennedy/Telex Panels
220-3610	Multiline TC IOC Connectors J1 - J4	Multiline Half Panel SCL J1
220-2436	DC Power Cable	Multiline Half Panel SCL J2 Cable, 5 to 4 'Y', Plug-Plug

● END

WANG LABORATORIES, INC

ONE INDUSTRIAL AVENUE LOWELL MASSACHUSETTS 01851 TEL (617) 459 5000 TWX 710 343 6769 TELEX 94 7421

PRINTED IN U.S.A.

COMPANY CONFIDENTIAL

END