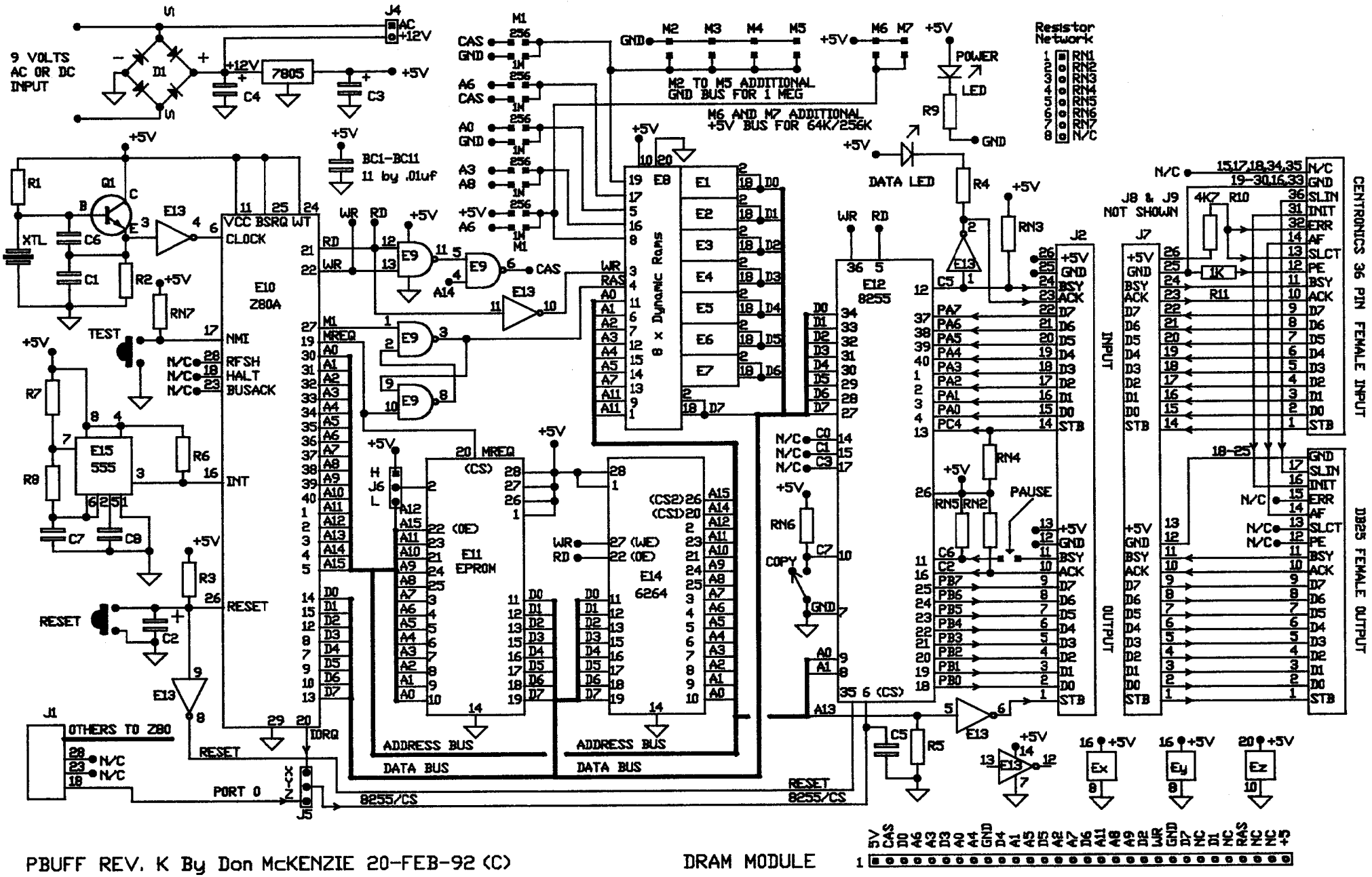

PBUFF REV. K By Don McKENZIE 20-FEB-92 (C)

DRAM MODULE